3DMC, Hamburg 2018

AM Machine Characterisation Using Artefact Based Dimensional Metrology

Rosie Broxton

Development Engineer

Contents

- **Context**
- **System Description**
  - Build, remove, inspect, analyse and store
- **Artefact Design**
  - Design for AM, AM parameters, dot code, Process Failure Mode Effects Analysis (PFMEA) and design iteration
- **Use Cases**
  - Arrays of artefacts (baseline and parameter variation)
  - Single artefacts (part traceability and SPC)
- **Proof of Concept**
  - Metrology testing and detecting changes in AM build parameters
- **Summary**

Context

Additive Manufacturing

- High variety, low volume
- Complex and high value parts
- Subject to heat treatment and post-processing techniques

Aim

- Characterise and compare AM machine performance
- Provide confidence, traceability and a better understanding of the process
- Provide a comparable metric irrespective of material, platform or parts

System Description

Build

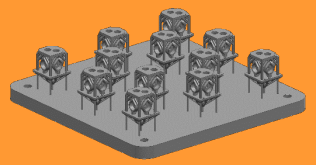

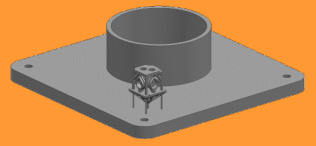

Remove

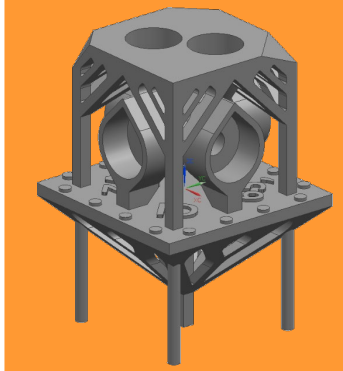

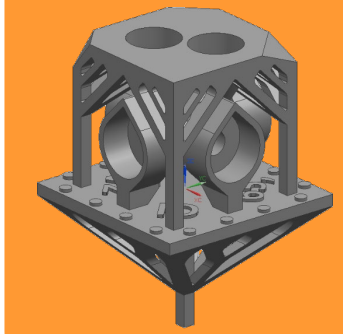

Inspect

Analyse

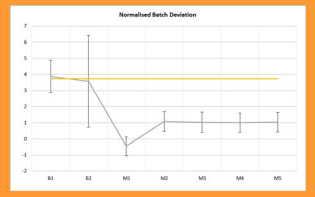

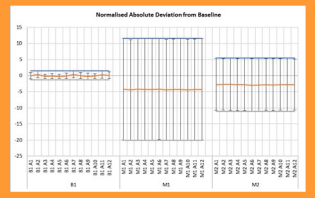

Store

Results | Raw Data

	DateTime	Feature Label
0	11/09/2017 14:28:08	BasePlane
0	11/09/2017 14:28:35	TopPlane
0	11/09/2017 14:29:13	XBoreLarge
0	11/09/2017 14:29:13	XBoreLarge
0	11/09/2017 14:29:28	YBoreLarge
0	11/09/2017 14:29:28	YBoreLarge
0	11/09/2017 14:29:20	XBoreSmall
0	11/09/2017 14:29:20	XBoreSmall
0	11/09/2017 14:29:36	YBoreSmall
0	11/09/2017 14:29:36	YBoreSmall
0	11/09/2017 14:29:13	XBoreLarge
0	11/09/2017 14:29:13	XBoreLarge
0	11/09/2017 14:29:13	XBoreLarge
0	11/09/2017 14:29:13	XBoreLarge
0	11/09/2017 14:29:13	XBoreLarge
0	11/09/2017 14:29:13	XBoreLarge
0	11/09/2017 14:29:20	XBoreSmall
0	11/09/2017 14:29:20	XBoreSmall
0	11/09/2017 14:29:20	XBoreSmall

System Description – Build and Remove

Artefact ID can be associated with:

- Test purpose
- Position on plate
- Build logs
  - Platform and material
  - Build parameters
  - Other parts on the plate

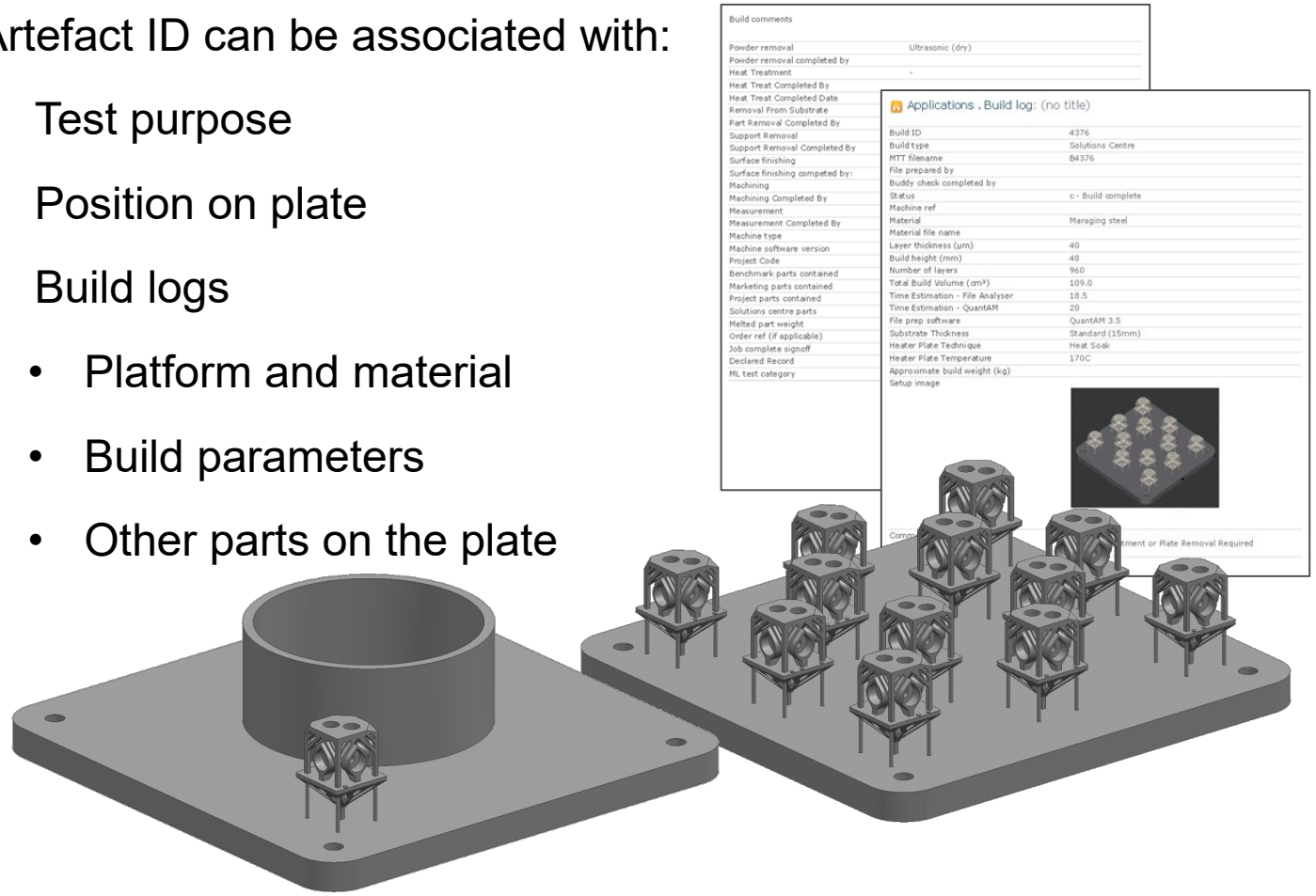

Supports:

- Designed to be easily manually removed, e.g. hammer and chisel
- Outer supports are removed before inspection

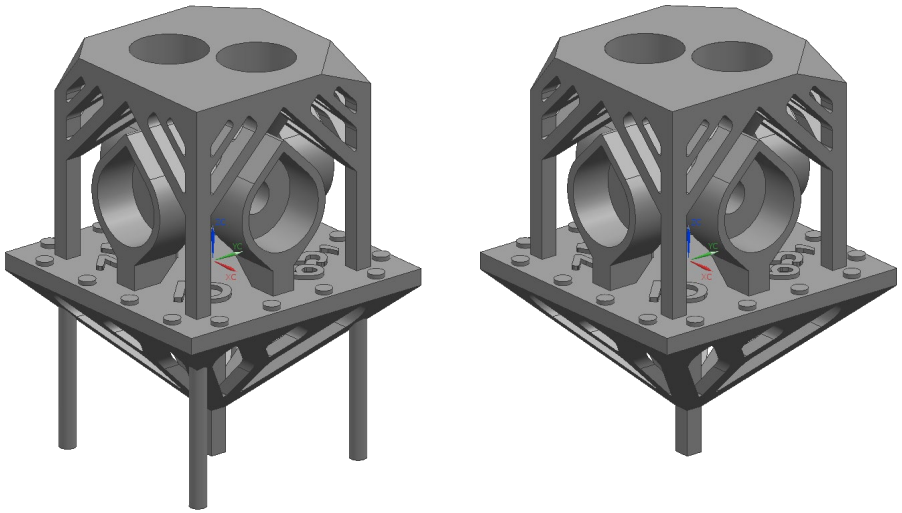

System Description – Inspect

- Simple, repeatable part location
- Minimal operator intervention
- Probing strategy is a mix of best practice and empirically tested approaches
- Master artefacts built in the same material as inspected artefacts

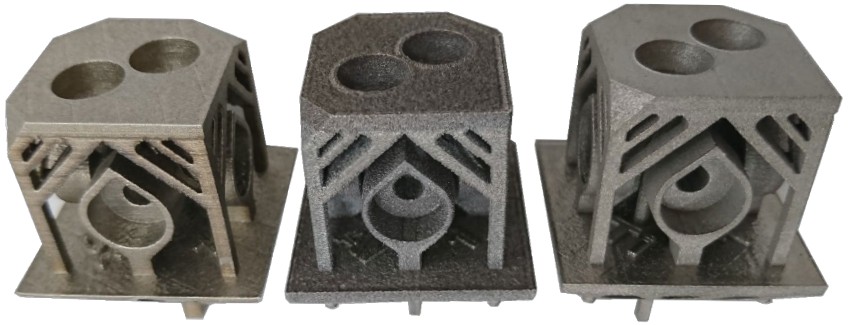

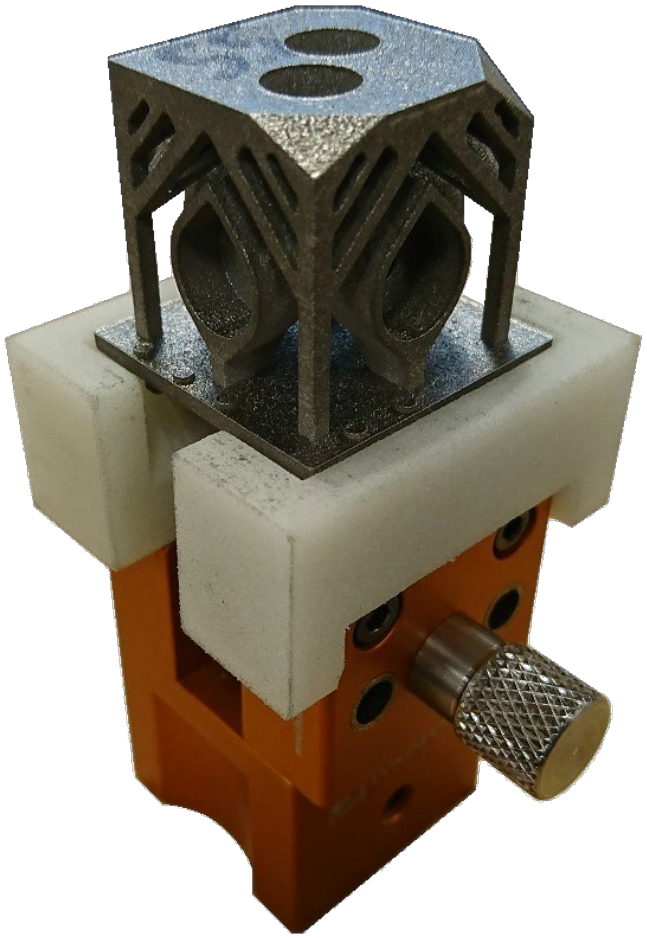

System Description – Analyse

- Moving from typical results files (*.rtf, *.res, *.csv) to a custom *.csv template
- Importing results in to SPC software for metrology testing
- Importing results in to database and graphing software to develop software wireframes and useful charts

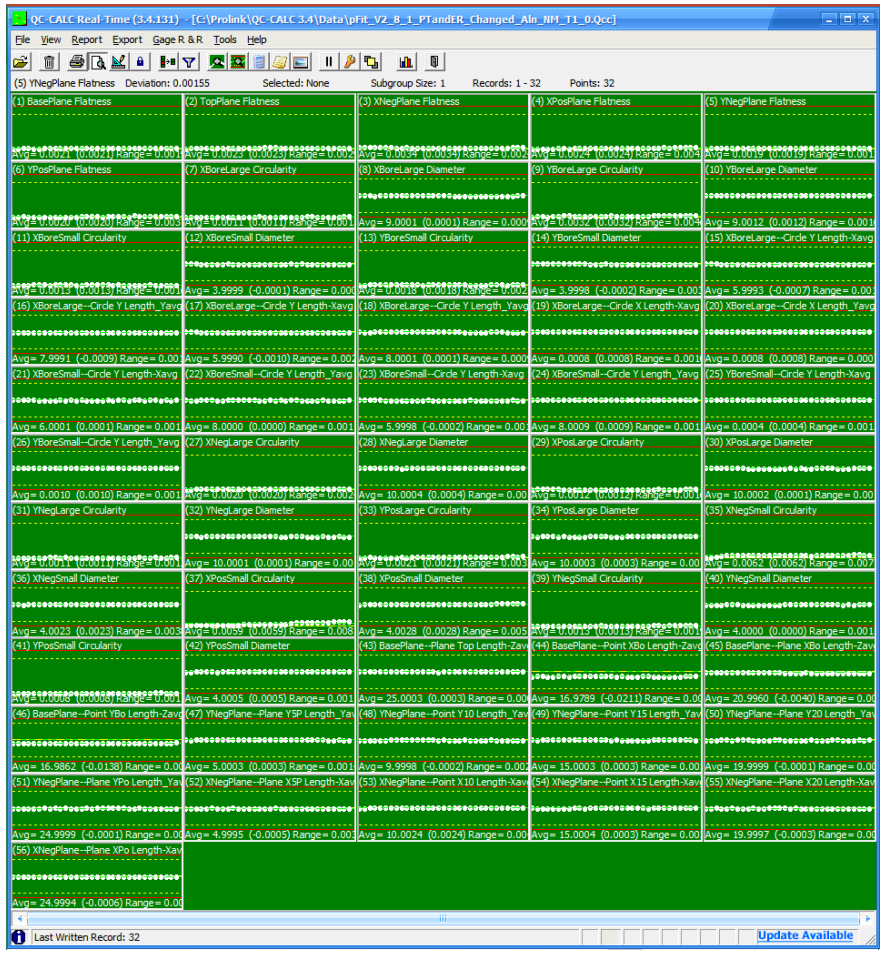

System Description – Analyse

- Moving from typical results files (*.rtf, *.res, *.csv) to a custom *.csv template
- Importing results in to SPC software for metrology testing
- Importing results in to database and graphing software to develop software wireframes and useful charts

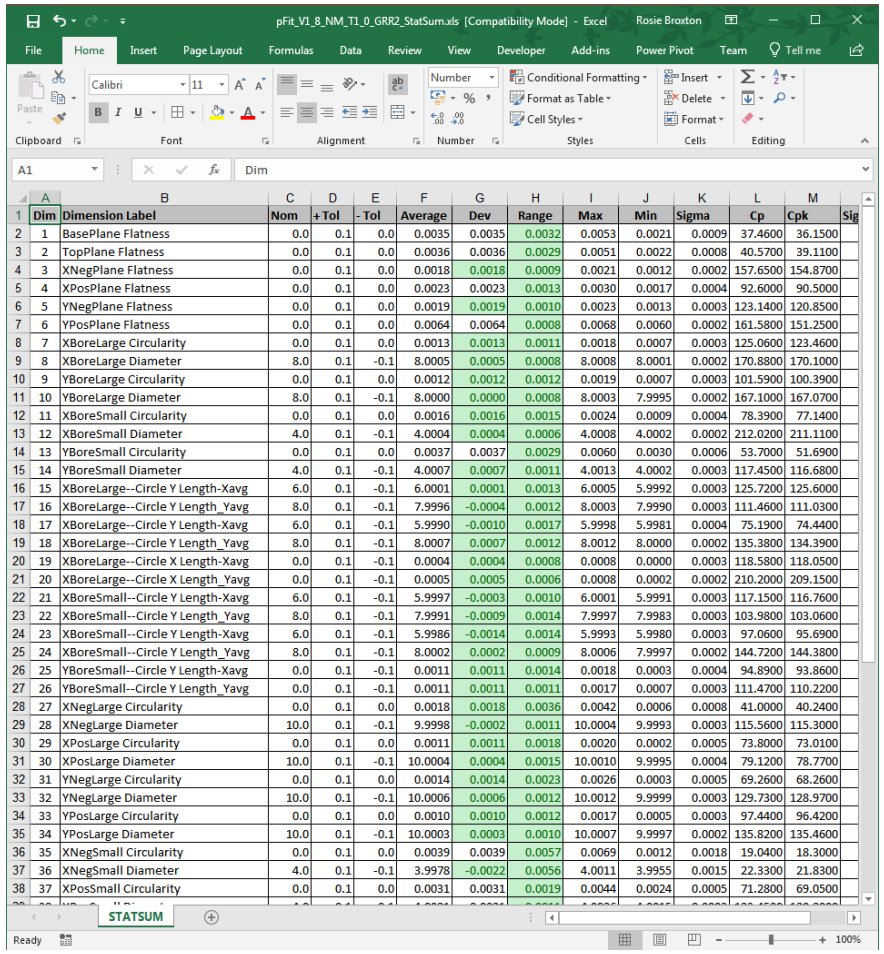

Dim	Dimension Label	Nom	+ Tol	- Tol	Average	Dev	Range	Max	Min	Sigma	Cp	Cpk
1	BasePlane Flatness	0.0	0.1	0.0	0.0035	0.0035	0.0032	0.0053	0.0021	0.0009	37.4600	36.1500
2	TopPlane Flatness	0.0	0.1	0.0	0.0036	0.0036	0.0029	0.0051	0.0022	0.0008	40.5700	39.1100
3	XNegPlane Flatness	0.0	0.1	0.0	0.0018	0.0018	0.0009	0.0021	0.0012	0.0002	157.6500	154.8700
4	XPosPlane Flatness	0.0	0.1	0.0	0.0023	0.0023	0.0013	0.0030	0.0017	0.0004	92.6000	90.5000
5	YNegPlane Flatness	0.0	0.1	0.0	0.0019	0.0019	0.0010	0.0023	0.0013	0.0003	123.1400	120.8500
6	YPosPlane Flatness	0.0	0.1	0.0	0.0064	0.0064	0.0008	0.0068	0.0060	0.0002	161.5800	151.2500
7	XBoreLarge Circularity	0.0	0.1	0.0	0.0013	0.0013	0.0011	0.0018	0.0007	0.0003	125.0600	123.4600
8	XBoreLarge Diameter	8.0	0.1	-0.1	8.0005	0.0005	0.0008	8.0008	8.0001	0.0002	170.8800	170.1000
9	YBoreLarge Circularity	0.0	0.1	0.0	0.0012	0.0012	0.0012	0.0019	0.0007	0.0003	101.5900	100.3900
10	YBoreLarge Diameter	8.0	0.1	-0.1	8.0000	0.0000	0.0008	8.0003	7.9995	0.0002	167.1000	167.0700
11	XBoreSmall Circularity	0.0	0.1	0.0	0.0016	0.0016	0.0015	0.0024	0.0009	0.0004	78.3900	77.1400
12	XBoreSmall Diameter	4.0	0.1	-0.1	4.0004	0.0004	0.0006	4.0008	4.0002	0.0002	212.0200	211.1100
13	YBoreSmall Circularity	0.0	0.1	0.0	0.0037	0.0037	0.0029	0.0060	0.0030	0.0006	53.7000	51.6900
14	YBoreSmall Diameter	4.0	0.1	-0.1	4.0007	0.0007	0.0011	4.0013	4.0002	0.0003	117.4500	116.6800
15	XBoreLarge--Circle Y Length-Xavg	6.0	0.1	-0.1	6.0001	0.0001	0.0013	6.0005	5.9992	0.0003	125.7200	125.6000
16	XBoreLarge--Circle Y Length_Yavg	8.0	0.1	-0.1	7.9996	-0.0004	0.0012	8.0003	7.9990	0.0003	111.4600	111.0300
17	XBoreLarge--Circle Y Length-Xavg	6.0	0.1	-0.1	5.9990	-0.0010	0.0017	5.9998	5.9981	0.0004	75.1900	74.4400
18	XBoreLarge--Circle Y Length_Yavg	8.0	0.1	-0.1	8.0007	0.0007	0.0012	8.0012	8.0000	0.0002	135.3800	134.3900
19	XBoreLarge--Circle X Length-Xavg	0.0	0.1	-0.1	0.0004	0.0004	0.0008	0.0008	0.0000	0.0003	118.5800	118.0500
20	XBoreLarge--Circle X Length_Yavg	0.0	0.1	-0.1	0.0005	0.0005	0.0006	0.0008	0.0002	0.0002	210.2000	209.1500
21	XBoreSmall--Circle Y Length-Xavg	6.0	0.1	-0.1	5.9997	-0.0003	0.0010	6.0001	5.9991	0.0003	117.1500	116.7600
22	XBoreSmall--Circle Y Length_Yavg	8.0	0.1	-0.1	7.9991	-0.0009	0.0014	7.9997	7.9983	0.0003	103.9800	103.0600
23	XBoreSmall--Circle Y Length-Xavg	6.0	0.1	-0.1	5.9986	-0.0014	0.0014	5.9993	5.9980	0.0003	97.0600	95.6900
24	XBoreSmall--Circle Y Length_Yavg	8.0	0.1	-0.1	8.0002	0.0002	0.0009	8.0006	7.9997	0.0002	144.7200	144.3800
25	YBoreSmall--Circle Y Length-Xavg	0.0	0.1	-0.1	0.0011	0.0011	0.0014	0.0018	0.0003	0.0004	94.8900	93.8600
26	YBoreSmall--Circle Y Length_Yavg	0.0	0.1	-0.1	0.0011	0.0011	0.0011	0.0017	0.0007	0.0003	111.4700	110.2200
27	XNegLarge Circularity	0.0	0.1	0.0	0.0018	0.0018	0.0036	0.0042	0.0006	0.0008	41.0000	40.2400
28	XNegLarge Diameter	10.0	0.1	-0.1	9.9998	-0.0002	0.0011	10.0004	9.9993	0.0003	115.5600	115.3000
29	XPosLarge Circularity	0.0	0.1	0.0	0.0011	0.0011	0.0018	0.0020	0.0002	0.0005	73.8000	73.0100
30	XPosLarge Diameter	10.0	0.1	-0.1	10.0004	0.0004	0.0015	10.0010	9.9995	0.0004	79.1200	78.7700
31	YNegLarge Circularity	0.0	0.1	0.0	0.0014	0.0014	0.0023	0.0026	0.0003	0.0005	69.2600	68.2600
32	YNegLarge Diameter	10.0	0.1	-0.1	10.0006	0.0006	0.0012	10.0012	9.9999	0.0003	129.7300	128.9700
33	YPosLarge Circularity	0.0	0.1	0.0	0.0010	0.0010	0.0012	0.0017	0.0005	0.0003	97.4400	96.4200
34	YPosLarge Diameter	10.0	0.1	-0.1	10.0003	0.0003	0.0010	10.0007	9.9997	0.0002	135.8200	135.4600
35	XNegSmall Circularity	0.0	0.1	0.0	0.0039	0.0039	0.0057	0.0069	0.0012	0.0018	19.0400	18.3000
36	XNegSmall Diameter	4.0	0.1	-0.1	3.9978	-0.0022	0.0056	4.0011	3.9955	0.0015	22.3300	21.8300
37	XPosSmall Circularity	0.0	0.1	0.0	0.0031	0.0031	0.0019	0.0044	0.0024	0.0005	71.2800	69.0500

System Description – Analyse

- Moving from typical results files (*.rtf, *.res, *.csv) to a custom *.csv template
- Importing results in to SPC software for metrology testing
- Importing results in to database and graphing software to develop software wireframes and useful charts

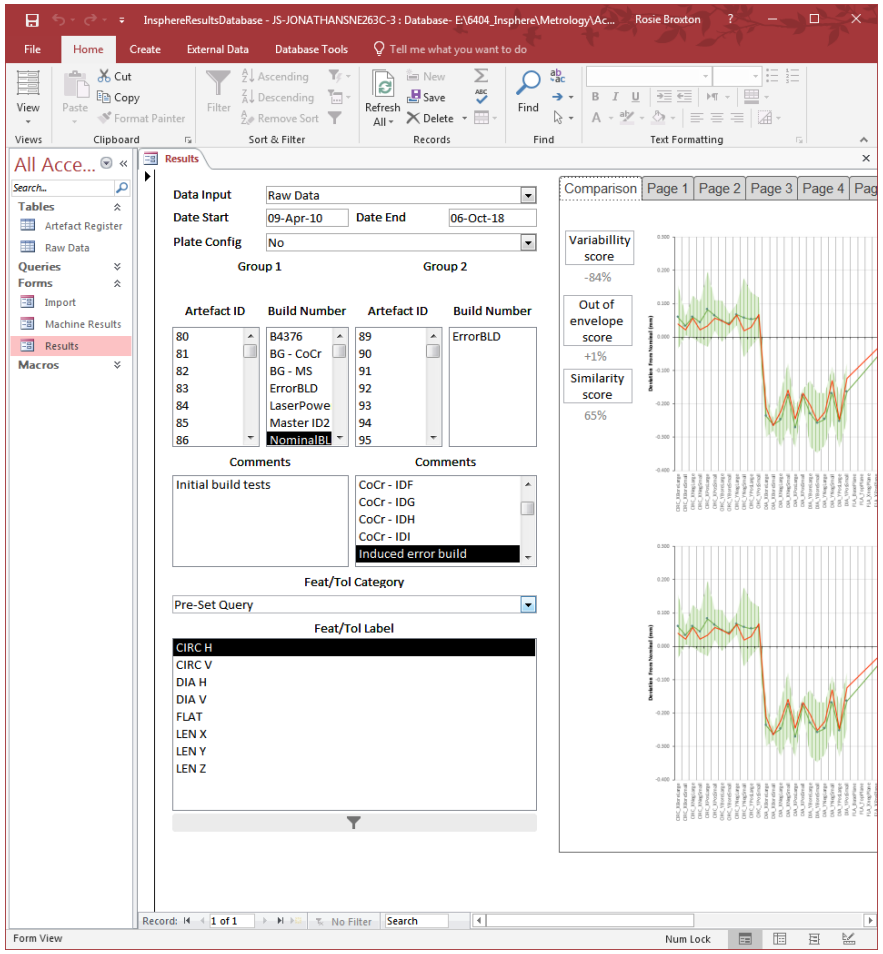

System Description – Analyse

- Moving from typical results files (*.rtf, *.res, *.csv) to a custom *.csv template
- Importing results in to SPC software for metrology testing
- Importing results in to database and graphing software to develop software wireframes and useful charts

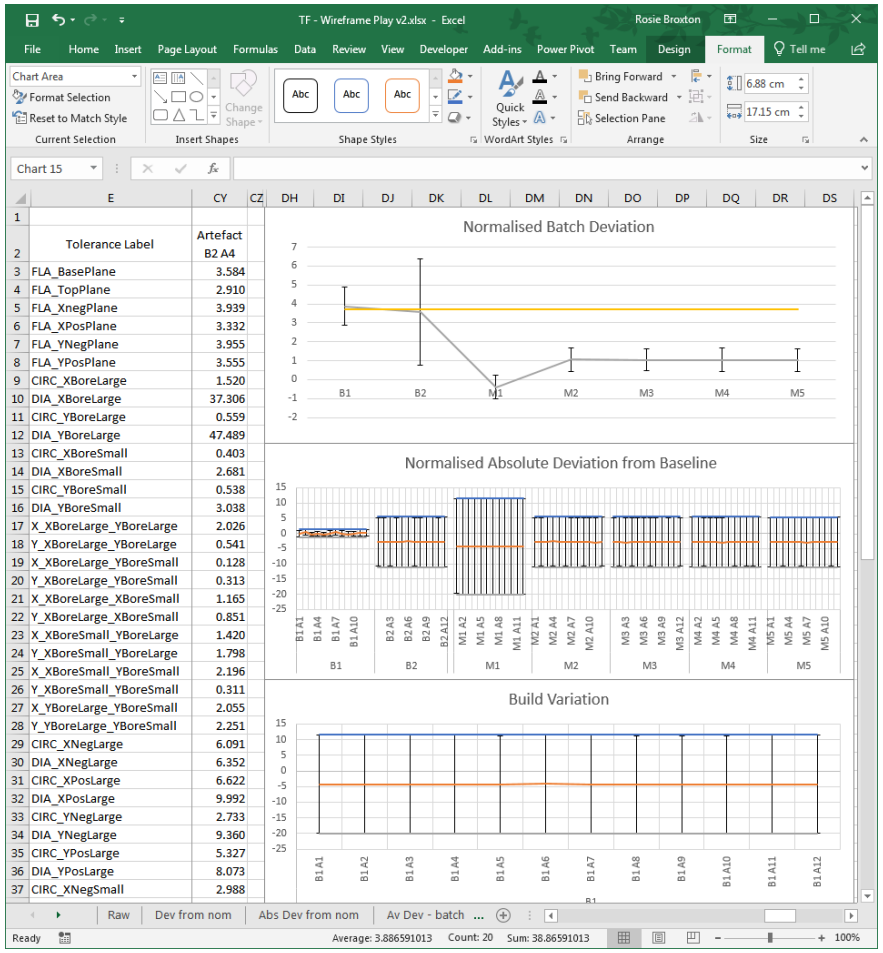

Tolerance Label	Artefact B2 A4
FLA_BasePlane	3.584
FLA_TopPlane	2.910
FLA_XnegPlane	3.939
FLA_XPosPlane	3.332
FLA_YNegPlane	3.955
FLA_YPosPlane	3.555
CIRC_XBoreLarge	1.520
DIA_XBoreLarge	37.306
CIRC_YBoreLarge	0.559
DIA_YBoreLarge	47.489
CIRC_XBoreSmall	0.403
DIA_XBoreSmall	2.681
CIRC_YBoreSmall	0.538
DIA_YBoreSmall	3.038
X_XBoreLarge_YBoreLarge	2.026
Y_XBoreLarge_YBoreLarge	0.541
X_XBoreLarge_YBoreSmall	0.128
Y_XBoreLarge_YBoreSmall	0.313
X_XBoreLarge_XBoreSmall	1.165
Y_XBoreLarge_XBoreSmall	0.851
X_XBoreSmall_YBoreLarge	1.420
Y_XBoreSmall_YBoreLarge	1.798
X_XBoreSmall_YBoreSmall	2.196
Y_XBoreSmall_YBoreSmall	0.311
X_YBoreLarge_YBoreSmall	2.055
Y_YBoreLarge_YBoreSmall	2.251
CIRC_XNegLarge	6.091
DIA_XNegLarge	6.352
CIRC_XPosLarge	6.622
DIA_XPosLarge	9.992
CIRC_YNegLarge	2.733
DIA_YNegLarge	9.360
CIRC_YPosLarge	5.327
DIA_YPosLarge	8.073
CIRC_XNegSmall	2.988

System Description – Store

- Artefacts stored as back-up to database results
- Can be re-inspected if required
- Also available for other non-destructive testing
- Custom storage designed to hold two baseline builds
- Foam inserts prevent damage to the artefacts

Artefact Design

- Design considerations:
- Design for additive manufacture
- Ease of build and removal
- Identifying changes in AM parameters
- Redundancy of features
- Short enough to build relatively quickly
- Large enough for robust tactile measurement
- Machine-readable ID features
- Design iteration

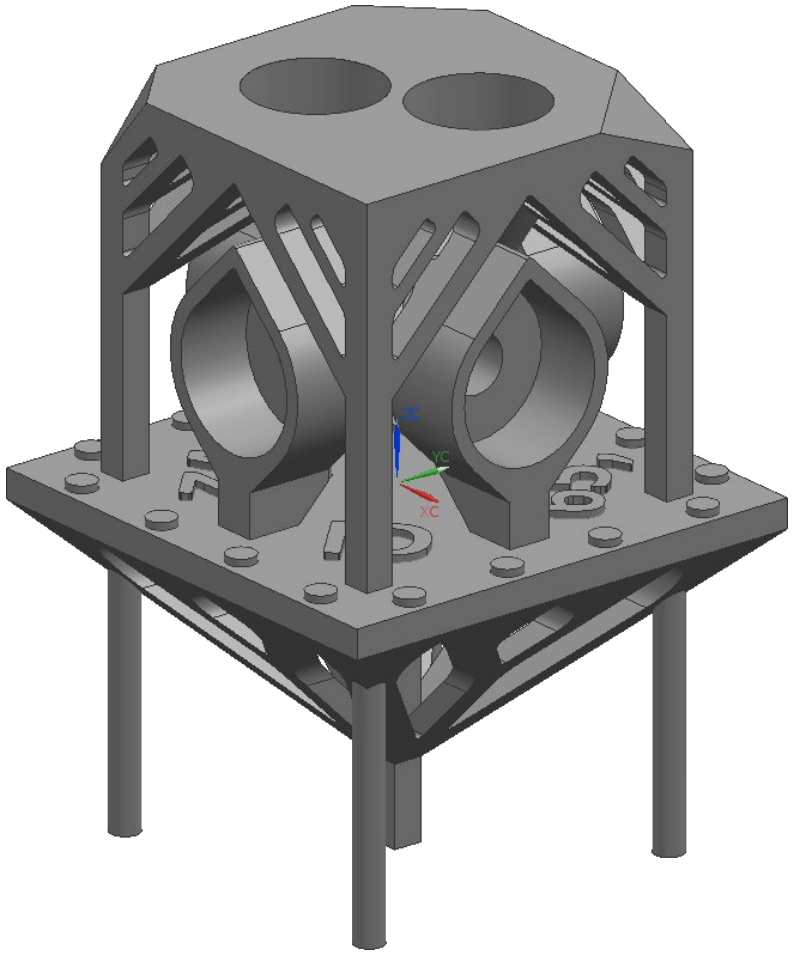

Artefact Design – Design for AM

- Tear-drop shaped bores
- Self-supporting angled faces
- Minimised material
- Minimum 1mm wall thickness
- Supports designed for stable attachment but easy removal

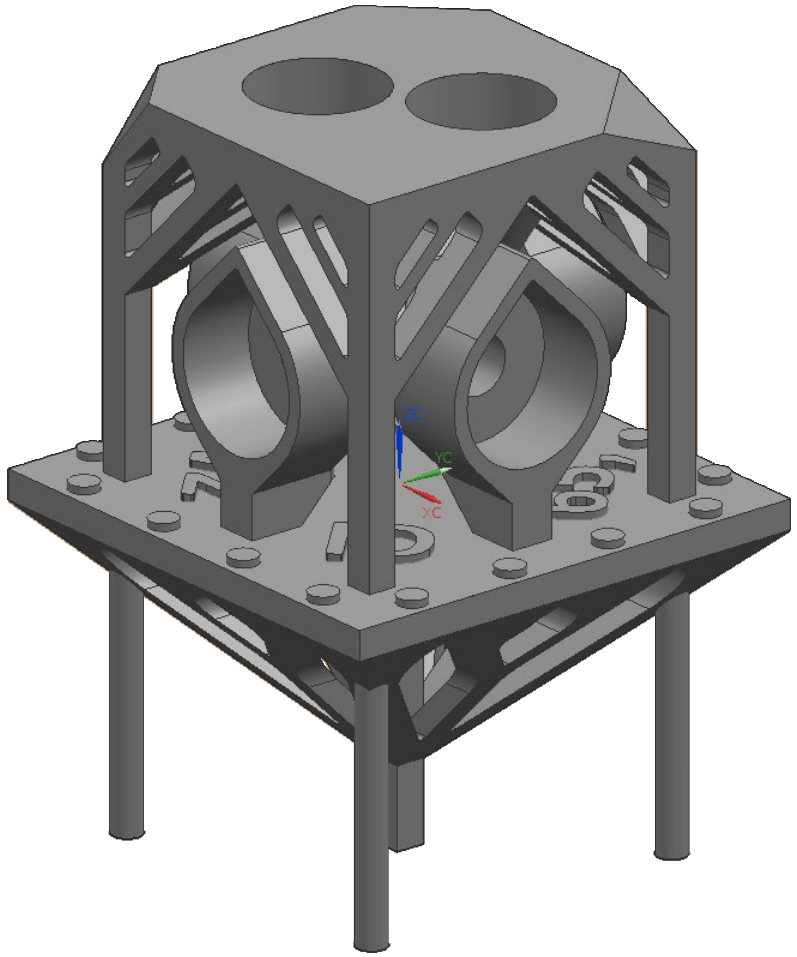

Artefact Design – Design for AM

- Tear-drop shaped bores
- Self-supporting angled faces
- Minimised material
- Minimum 1mm wall thickness
- Supports designed for stable attachment but easy removal

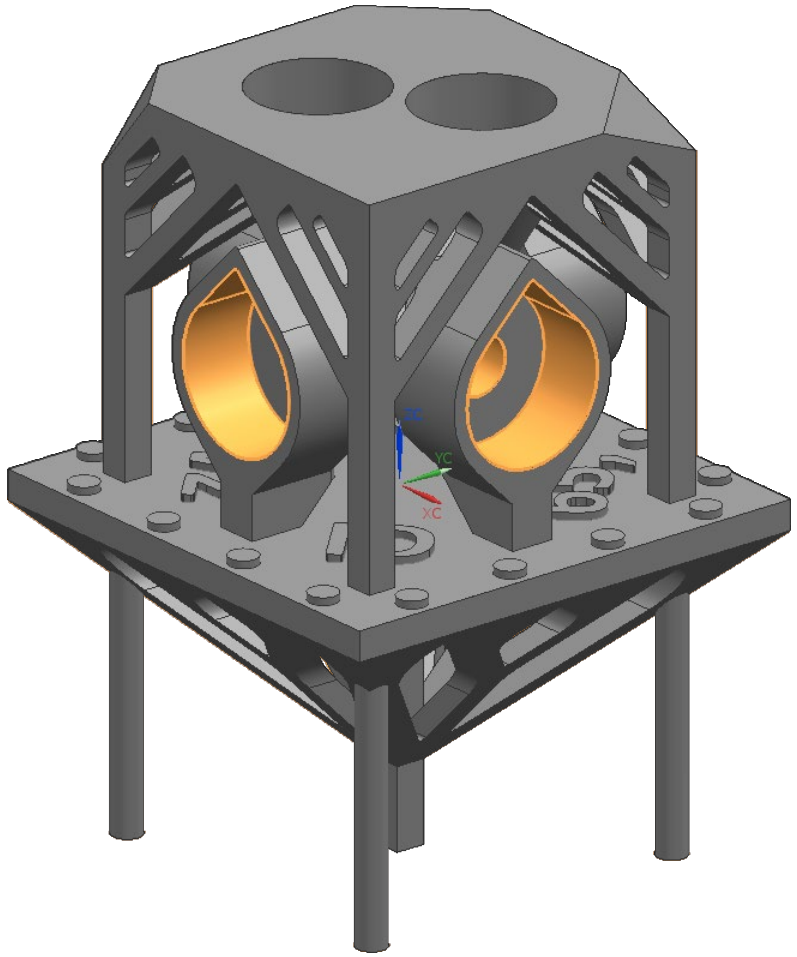

Artefact Design – Design for AM

- Tear-drop shaped bores
- Self-supporting angled faces
- Minimised material
- Minimum 1mm wall thickness
- Supports designed for stable attachment but easy removal

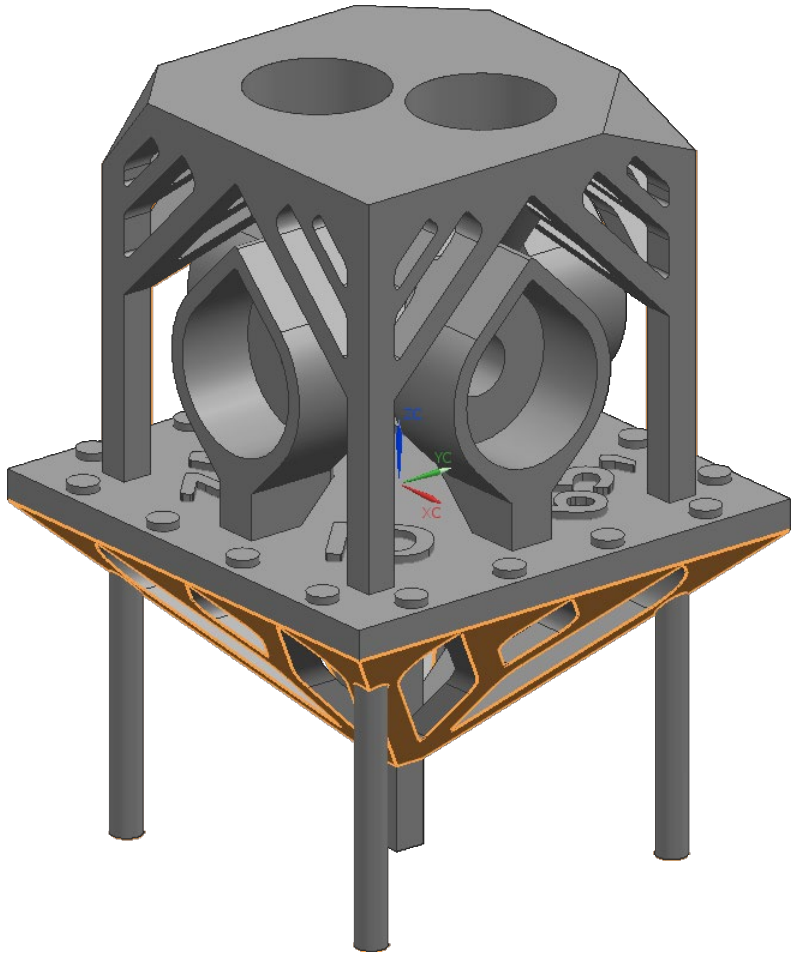

Artefact Design – Design for AM

- Tear-drop shaped bores
- Self-supporting angled faces
- Minimised material
- Minimum 1mm wall thickness
- Supports designed for stable attachment but easy removal

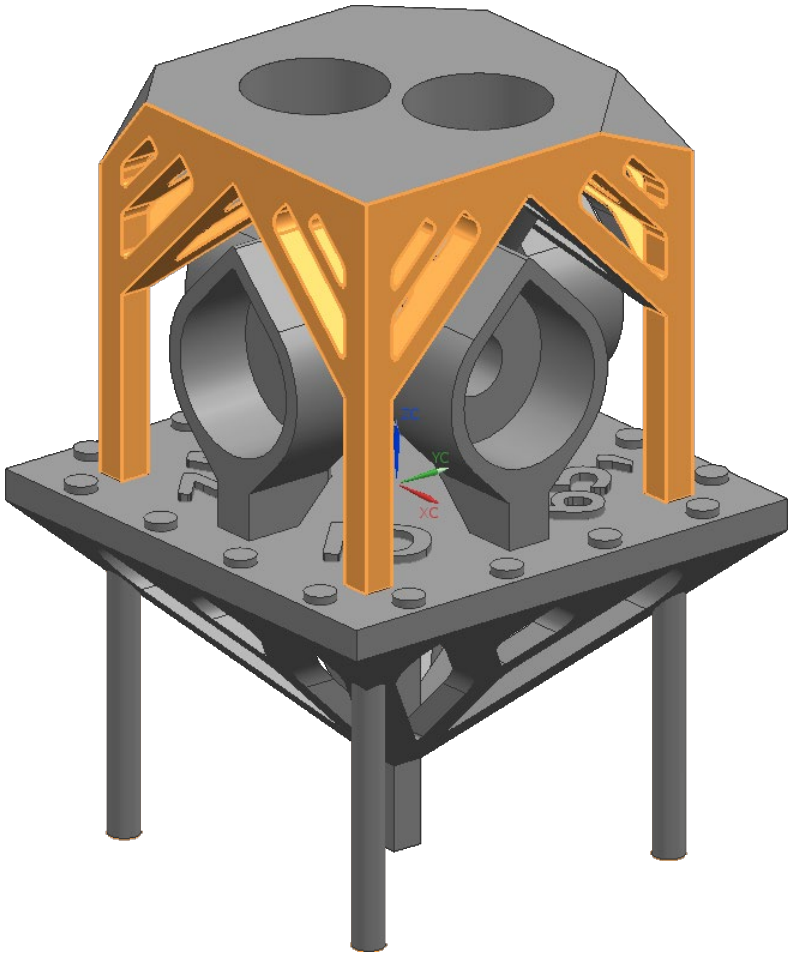

Artefact Design – Design for AM

- Tear-drop shaped bores
- Self-supporting angled faces
- Minimised material
- Minimum 1mm wall thickness
- Supports designed for stable attachment but easy removal

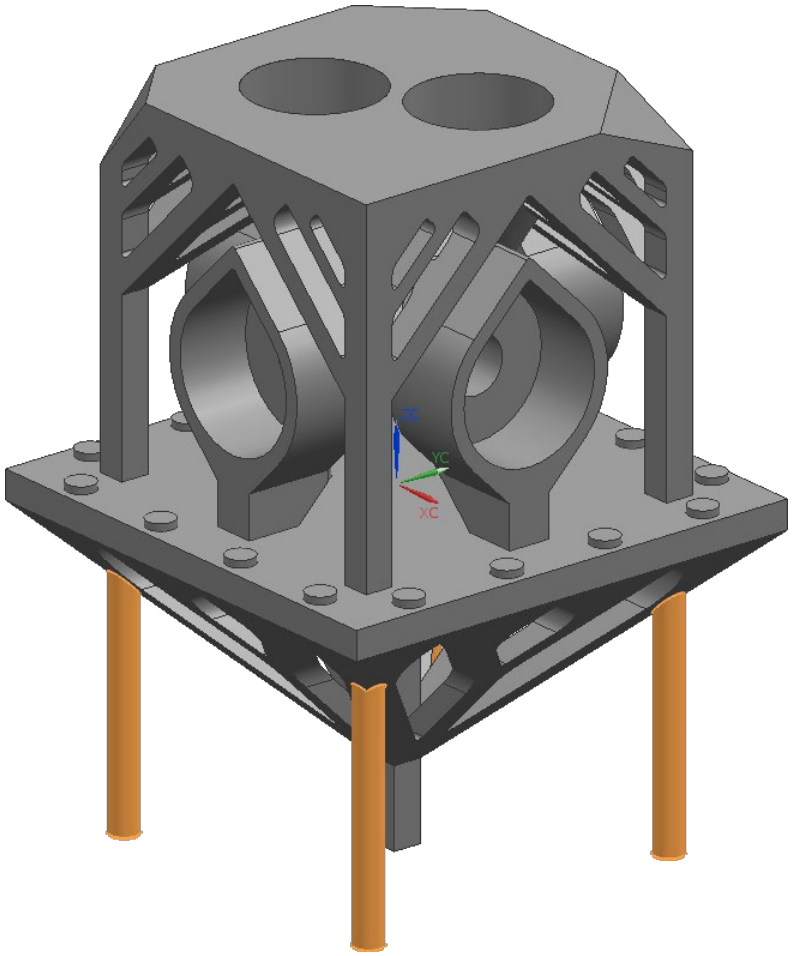

Artefact Design – AM Parameters

- Feature size is a compromise between build time and required size for robust metrology
- Features are repeated for redundancy
- Z scaling is calculated using the distances between the base plane and top plane and counterbore planes
- $Z\ Scaling\ = Z_{measured} \div Z_{nominal}$

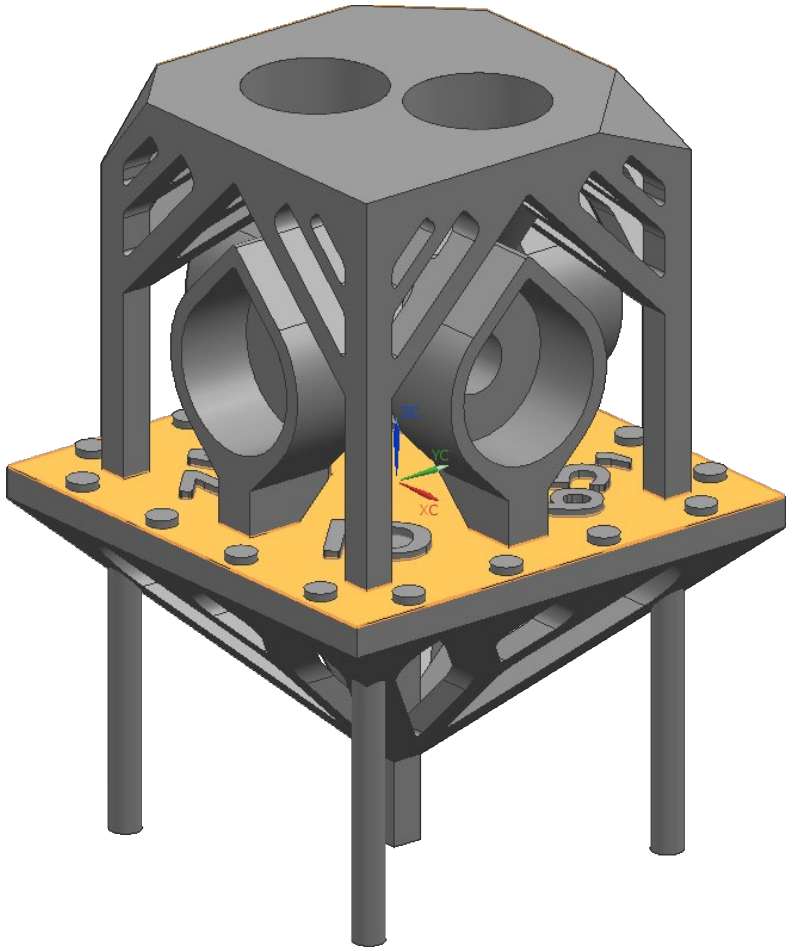

Artefact Design – AM Parameters

- Feature size is a compromise between build time and required size for robust metrology
- Features are repeated for redundancy
- Z scaling is calculated using the distances between the base plane and top plane and counterbore planes
- $Z\ Scaling\ = Z_{measured} \div Z_{nominal}$

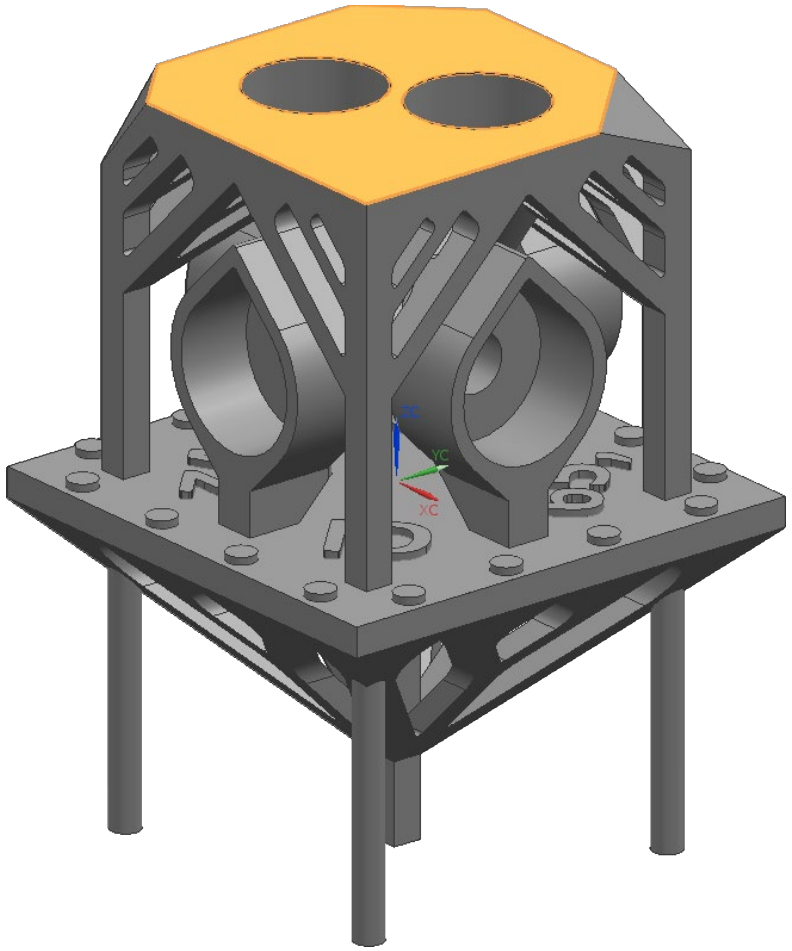

Artefact Design – AM Parameters

- Feature size is a compromise between build time and required size for robust metrology
- Features are repeated for redundancy
- Z scaling is calculated using the distances between the base plane and top plane and counterbore planes
- $Z\ Scaling\ = Z_{measured} \div Z_{nominal}$

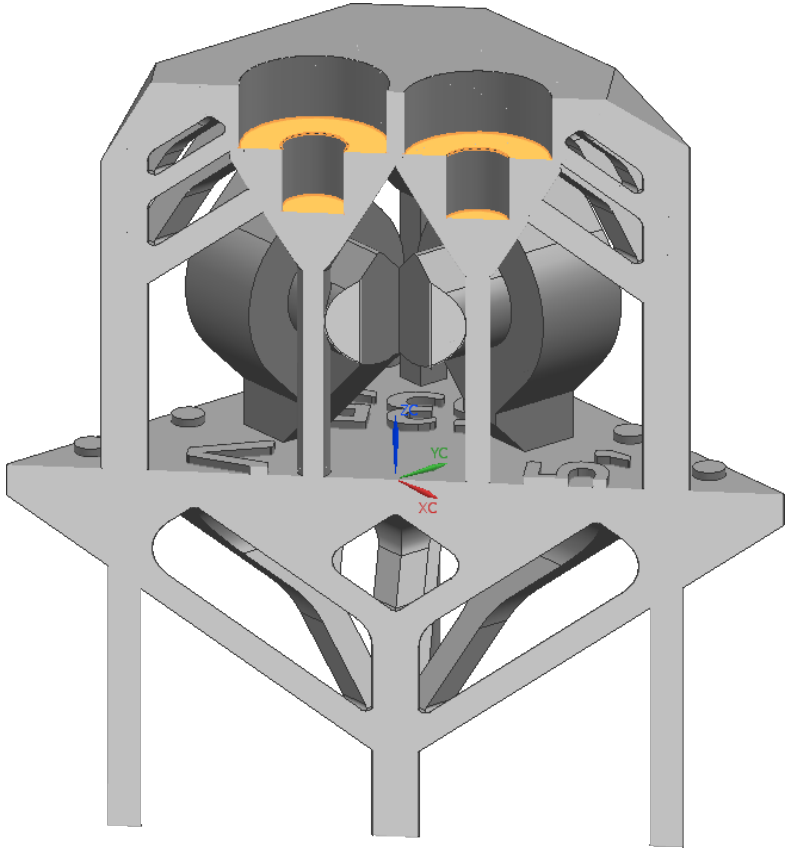

Artefact Design – AM Parameters

- XY scaling and spot compensation are calculated together using the distances between horizontal features
- $X_{measured} = (X_{nominal} \times XY\ Scaling) + (Coefficients \times Spot\ Compensation)$
- $$\begin{bmatrix} XY \\ SC \end{bmatrix} = \begin{bmatrix} 0 & 0 \\ 5 & 0 \\ 10 & 0 \\ 15 & -2 \\ 20 & -2 \\ 25 & -2 \\ 0 & 0 \\ 5 & 0 \\ 10 & 0 \\ 15 & -2 \\ 20 & -2 \\ 25 & -2 \end{bmatrix}^{-1} \begin{bmatrix} 0 \\ X_5 - X_0 \\ X_{10} - X_0 \\ X_{15} - X_0 \\ X_{20} - X_0 \\ X_{25} - X_0 \\ 0 \\ Y_5 - Y_0 \\ Y_{10} - Y_0 \\ Y_{15} - Y_0 \\ Y_{20} - Y_0 \\ Y_{25} - Y_0 \end{bmatrix}$$

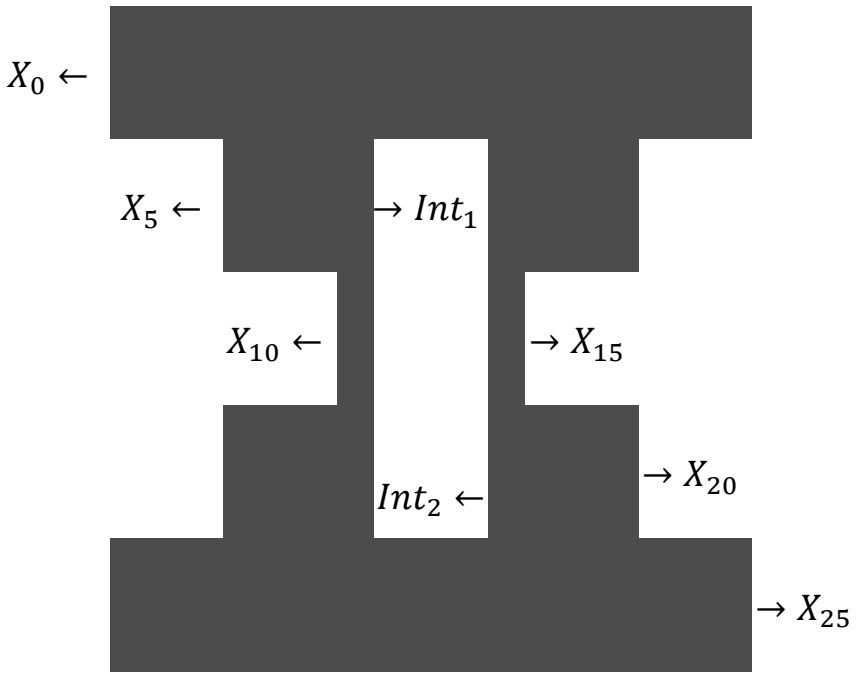

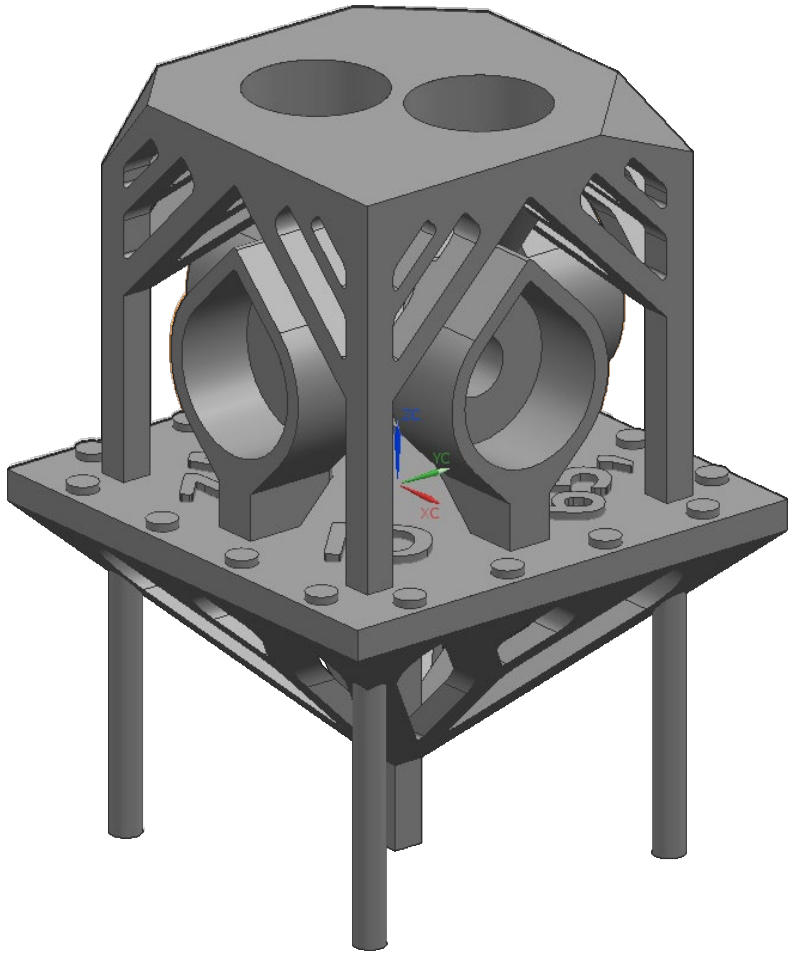

Artefact Design – AM Parameters

- XY scaling and spot compensation are calculated together using the distances between horizontal features
- $X_{measured} = (X_{nominal} \times XY\ Scaling) + (Coefficients \times Spot\ Compensation)$
- $$\begin{bmatrix} XY \\ SC \end{bmatrix} = \begin{bmatrix} 0 & 0 \\ 5 & 0 \\ 10 & 0 \\ 15 & -2 \\ 20 & -2 \\ 25 & -2 \\ 0 & 0 \\ 5 & 0 \\ 10 & 0 \\ 15 & -2 \\ 20 & -2 \\ 25 & -2 \end{bmatrix}^{-1} \begin{bmatrix} 0 \\ X_5 - X_0 \\ X_{10} - X_0 \\ X_{15} - X_0 \\ X_{20} - X_0 \\ X_{25} - X_0 \\ 0 \\ Y_5 - Y_0 \\ Y_{10} - Y_0 \\ Y_{15} - Y_0 \\ Y_{20} - Y_0 \\ Y_{25} - Y_0 \end{bmatrix}$$

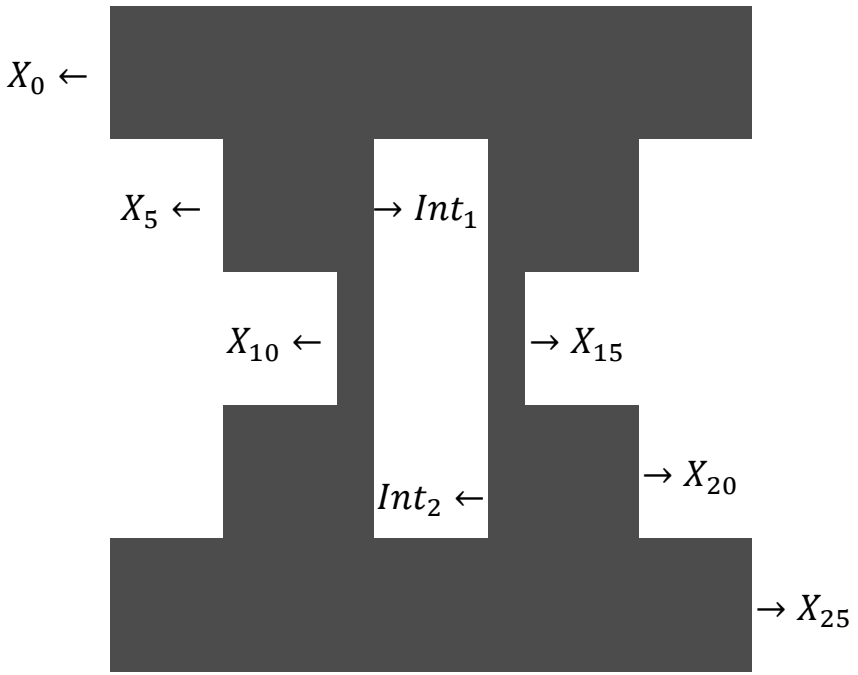

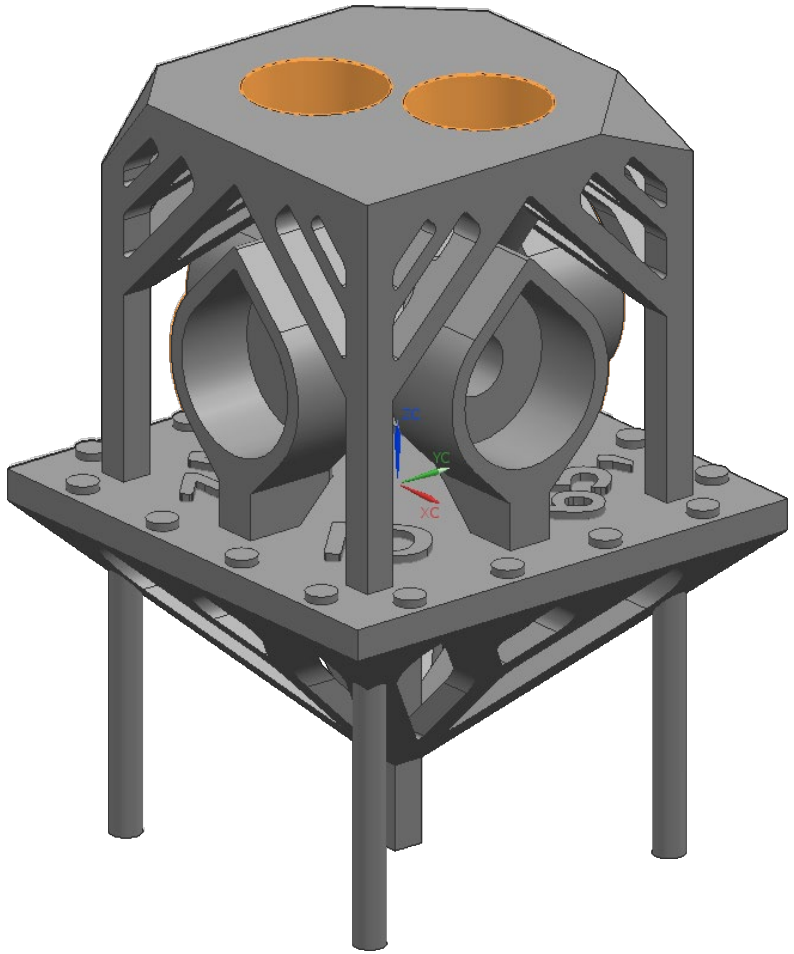

Artefact Design – AM Parameters

- XY scaling and spot compensation are calculated together using the distances between horizontal features
- $X_{measured} = (X_{nominal} \times XY\ Scaling) + (Coefficients \times Spot\ Compensation)$
- $$\begin{bmatrix} XY \\ SC \end{bmatrix} = \begin{bmatrix} 0 & 0 \\ 5 & 0 \\ 10 & 0 \\ 15 & -2 \\ 20 & -2 \\ 25 & -2 \\ 0 & 0 \\ 5 & 0 \\ 10 & 0 \\ 15 & -2 \\ 20 & -2 \\ 25 & -2 \end{bmatrix}^{-1} \begin{bmatrix} 0 \\ X_5 - X_0 \\ X_{10} - X_0 \\ X_{15} - X_0 \\ X_{20} - X_0 \\ X_{25} - X_0 \\ 0 \\ Y_5 - Y_0 \\ Y_{10} - Y_0 \\ Y_{15} - Y_0 \\ Y_{20} - Y_0 \\ Y_{25} - Y_0 \end{bmatrix}$$

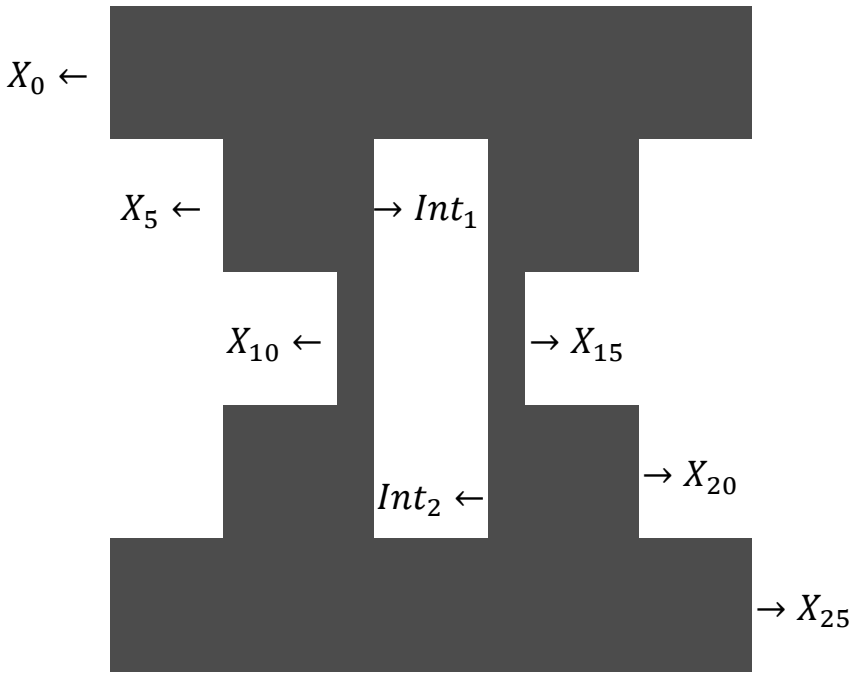

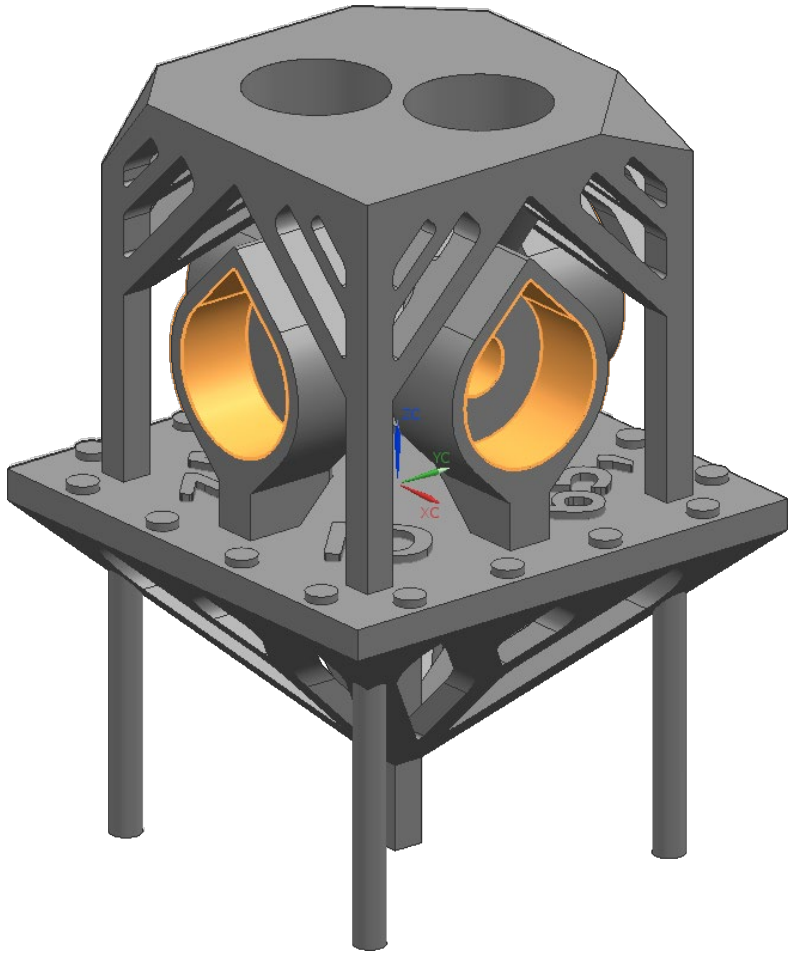

Artefact Design – AM Parameters

- XY scaling and spot compensation are calculated together using the distances between horizontal features
- $X_{measured} = (X_{nominal} \times XY\ Scaling) + (Coefficients \times Spot\ Compensation)$
- $$\begin{bmatrix} XY \\ SC \end{bmatrix} = \begin{bmatrix} 0 & 0 \\ 5 & 0 \\ 10 & 0 \\ 15 & -2 \\ 20 & -2 \\ 25 & -2 \\ 0 & 0 \\ 5 & 0 \\ 10 & 0 \\ 15 & -2 \\ 20 & -2 \\ 25 & -2 \end{bmatrix}^{-1} \begin{bmatrix} 0 \\ X_5 - X_0 \\ X_{10} - X_0 \\ X_{15} - X_0 \\ X_{20} - X_0 \\ X_{25} - X_0 \\ 0 \\ Y_5 - Y_0 \\ Y_{10} - Y_0 \\ Y_{15} - Y_0 \\ Y_{20} - Y_0 \\ Y_{25} - Y_0 \end{bmatrix}$$

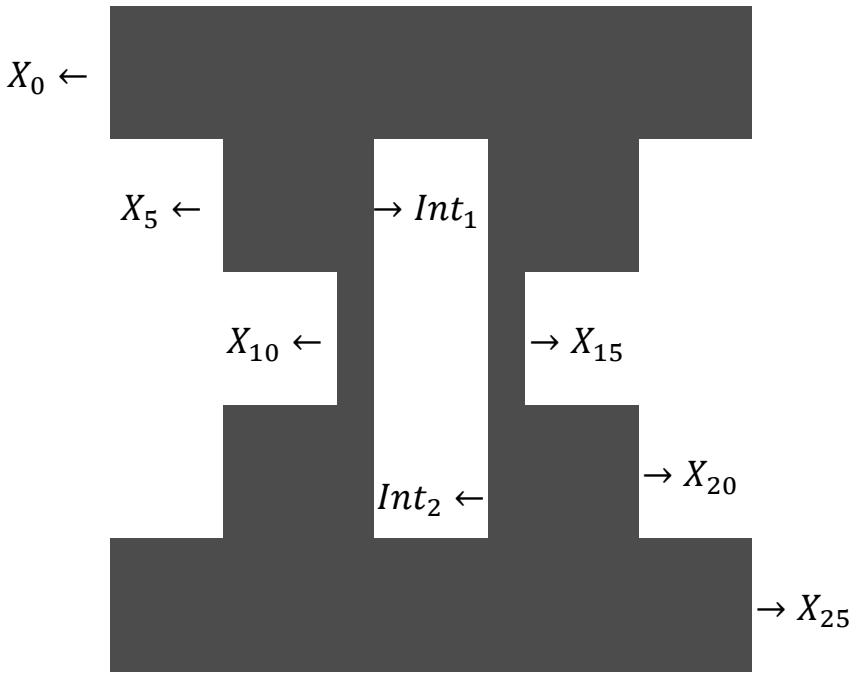

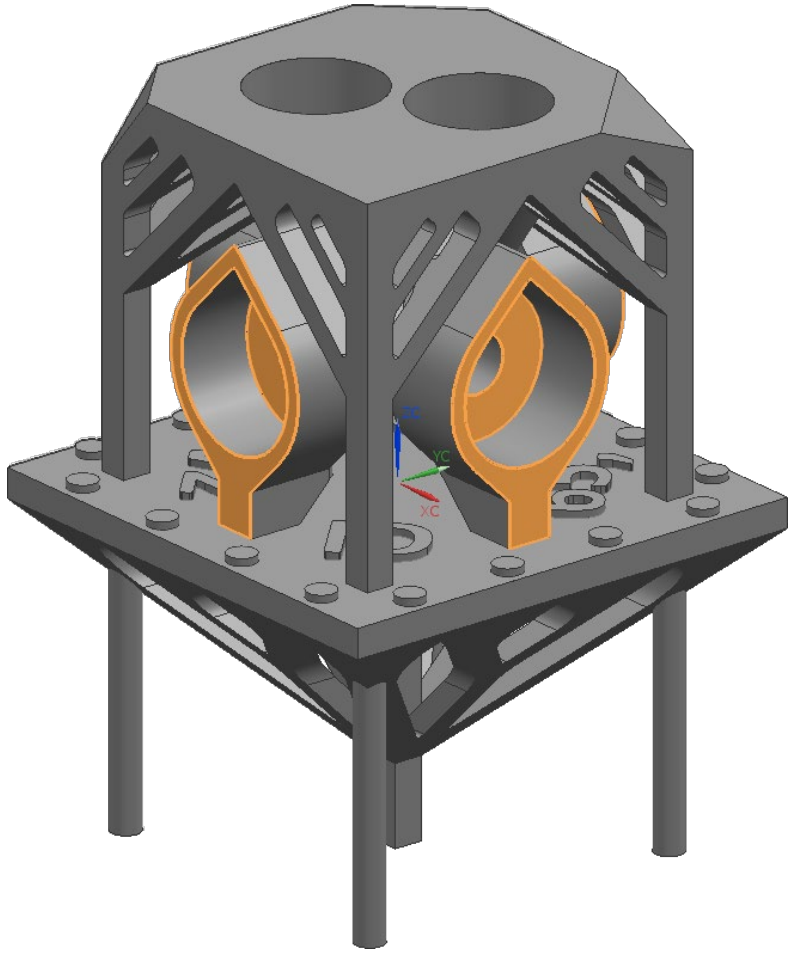

Artefact Design – AM Parameters

- XY scaling and spot compensation are calculated together using the distances between horizontal features
- $X_{measured} = (X_{nominal} \times XY\ Scaling) + (Coefficients \times Spot\ Compensation)$
- $$\begin{bmatrix} XY \\ SC \end{bmatrix} = \begin{bmatrix} 0 & 0 \\ 5 & 0 \\ 10 & 0 \\ 15 & -2 \\ 20 & -2 \\ 25 & -2 \\ 0 & 0 \\ 5 & 0 \\ 10 & 0 \\ 15 & -2 \\ 20 & -2 \\ 25 & -2 \end{bmatrix}^{-1} \begin{bmatrix} 0 \\ X_5 - X_0 \\ X_{10} - X_0 \\ X_{15} - X_0 \\ X_{20} - X_0 \\ X_{25} - X_0 \\ 0 \\ Y_5 - Y_0 \\ Y_{10} - Y_0 \\ Y_{15} - Y_0 \\ Y_{20} - Y_0 \\ Y_{25} - Y_0 \end{bmatrix}$$

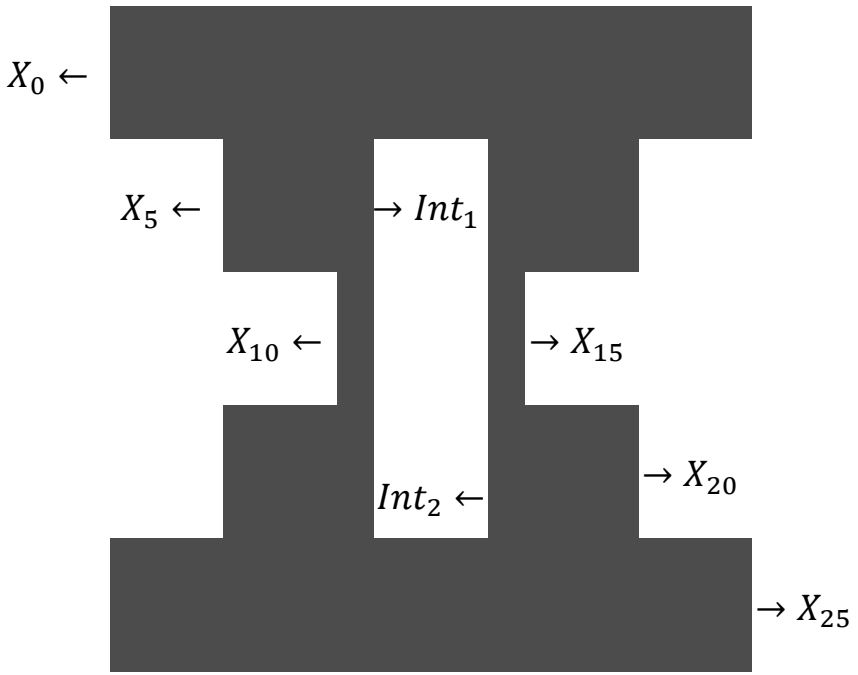

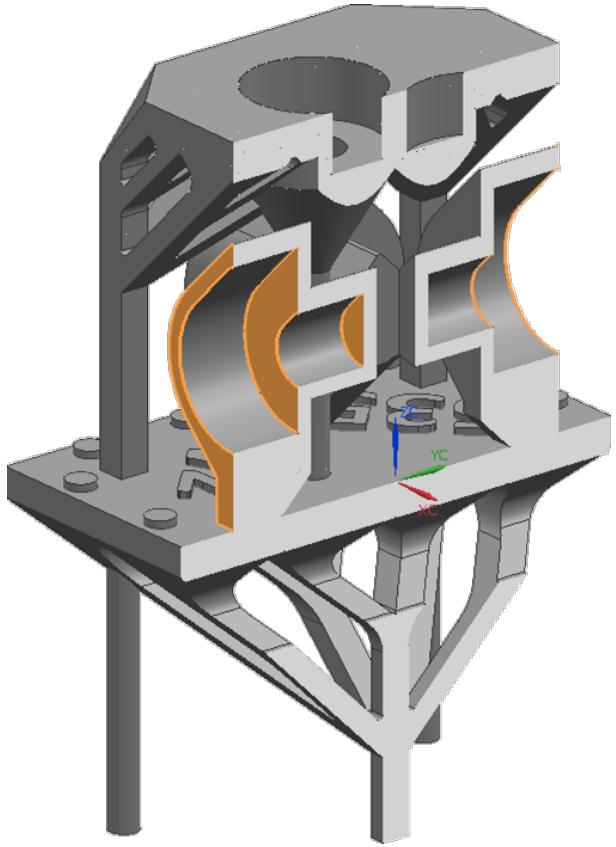

Artefact Design – Dot Code

- Currently used as 16 bit ID with associated details in an artefact register
- Number repeated in human-readable text for error checking/redundancy
- Could be divided in to smaller sections, e.g. two 8 bit IDs, or two 4 bit grid references and an 8 bit ID
- Could be built to multiple heights, e.g. two heights to create 32 bit IDs and so on

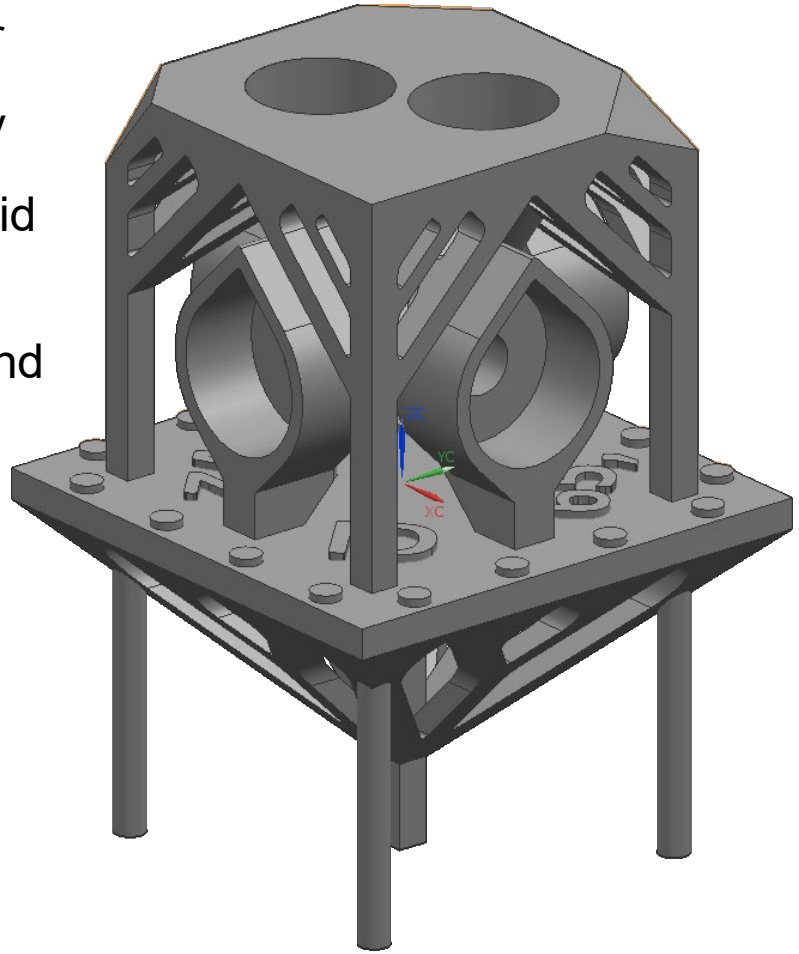

Artefact Design – Dot Code

- Currently used as 16 bit ID with associated details in an artefact register
- Number repeated in human-readable text for error checking/redundancy
- Could be divided in to smaller sections, e.g. two 8 bit IDs, or two 4 bit grid references and an 8 bit ID
- Could be built to multiple heights, e.g. two heights to create 32 bit IDs and so on

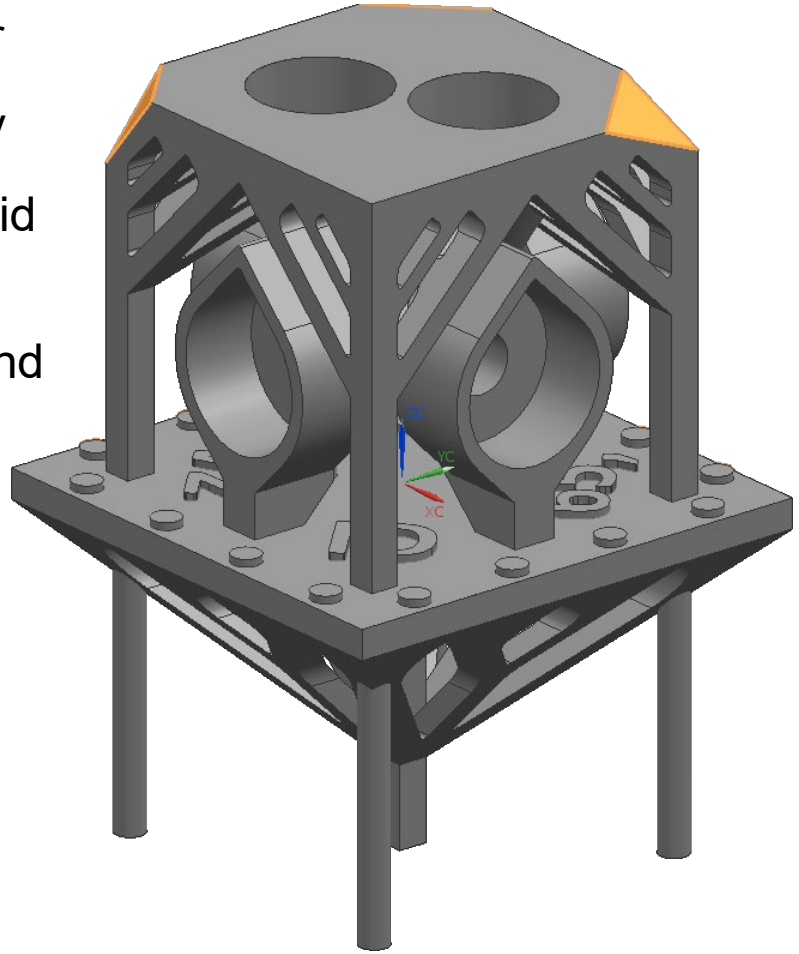

Artefact Design – Dot Code

- Currently used as 16 bit ID with associated details in an artefact register
- Number repeated in human-readable text for error checking/redundancy
- Could be divided in to smaller sections, e.g. two 8 bit IDs, or two 4 bit grid references and an 8 bit ID
- Could be built to multiple heights, e.g. two heights to create 32 bit IDs and so on

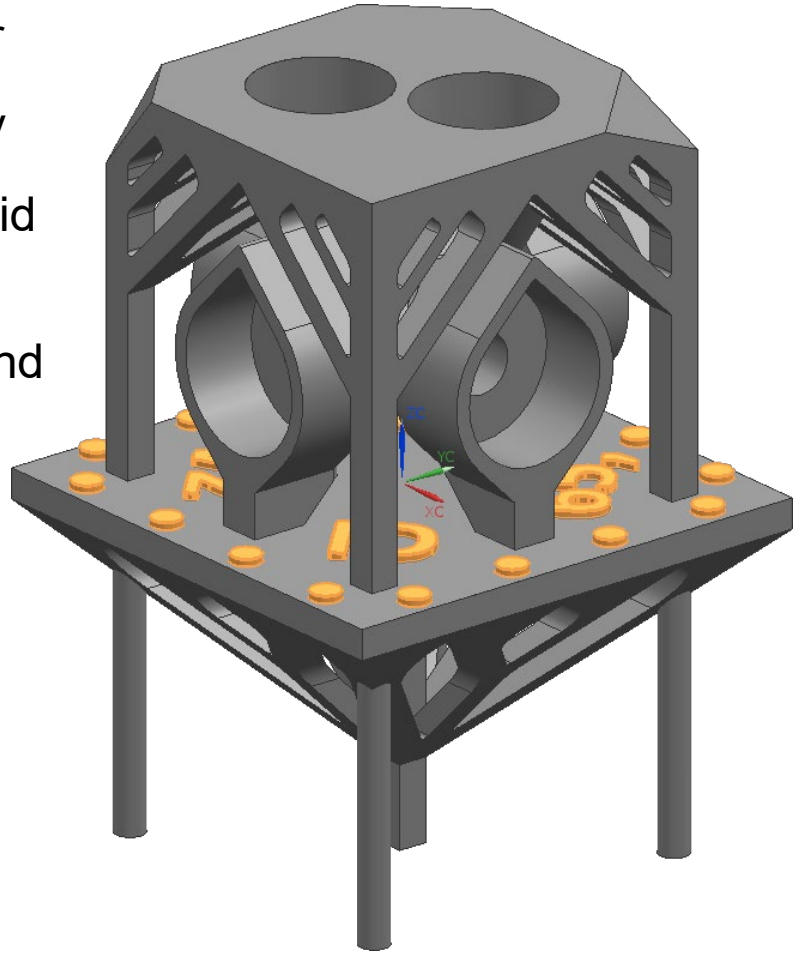

Artefact Design – Design Iteration

- Move from multiple styli to star stylus to eliminate tool changes and prevent shanking on side features
- Increase in stylus diameter to prevent shanking on internal features
- Increase in circular feature and base plane size and dot code spacing

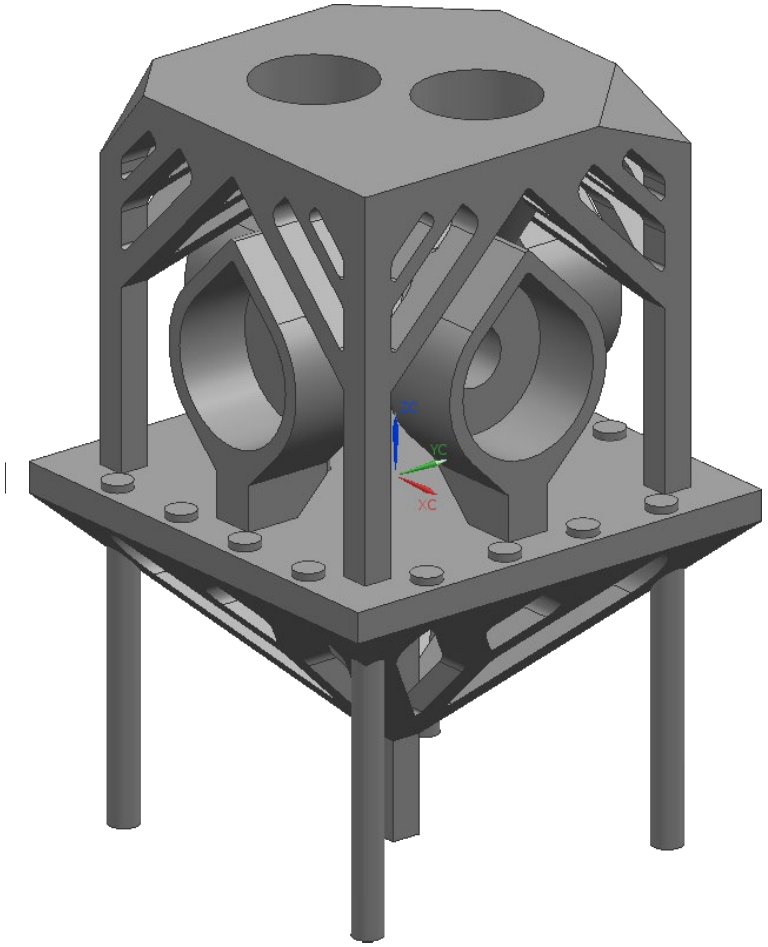

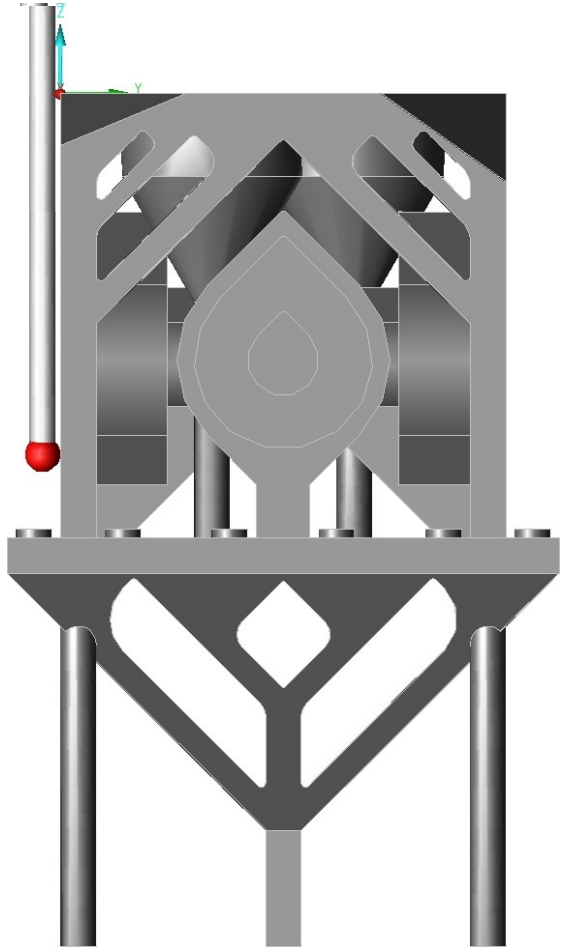

Artefact Design – Design Iteration

- Move from multiple styli to star stylus to eliminate tool changes and prevent shanking on side features
- Increase in stylus diameter to prevent shanking on internal features
- Increase in circular feature and base plane size and dot code spacing

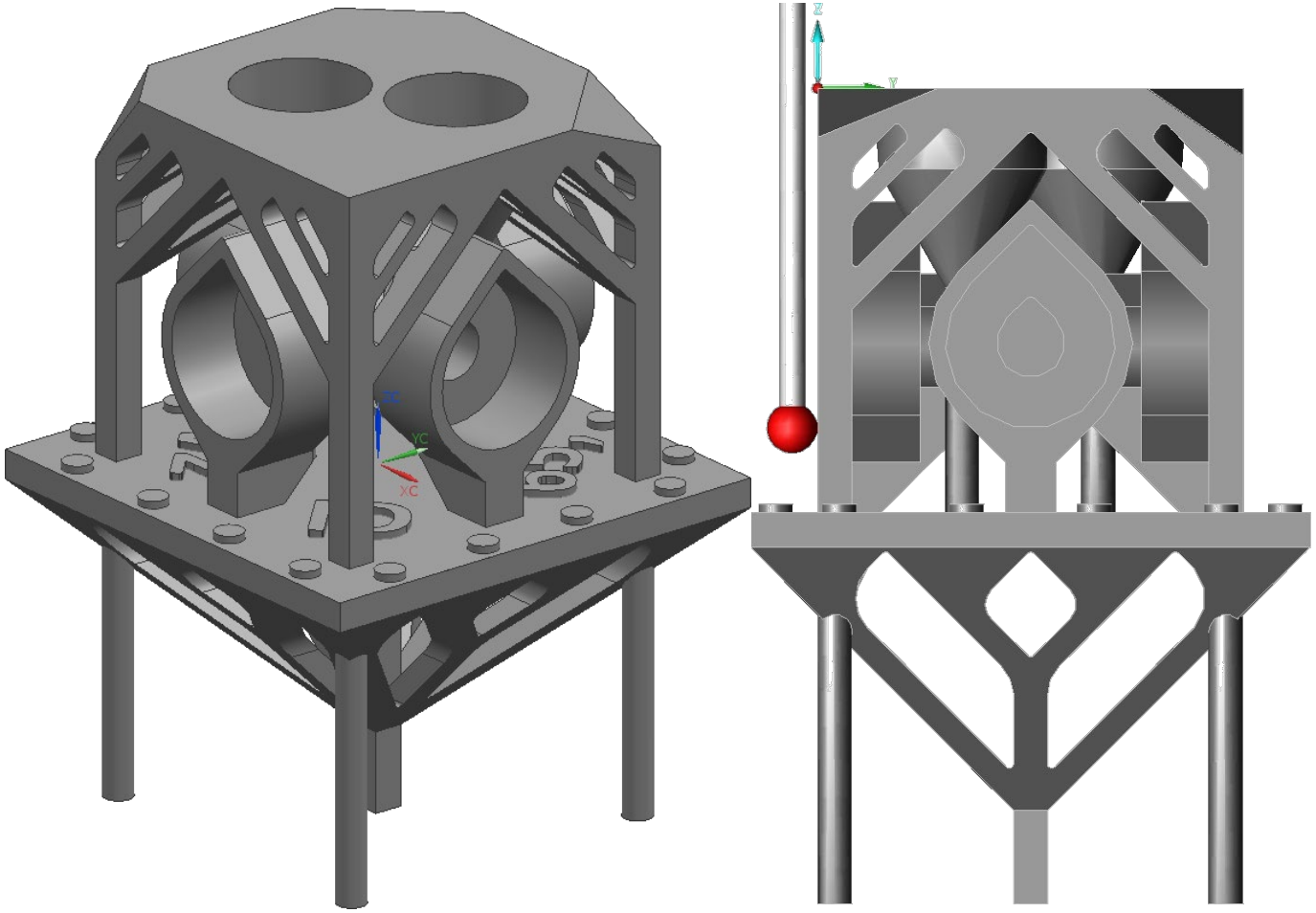

Use Cases

Commissioning and Acceptance	Array of artefacts	FAT/SAT and commissioning	Detailed benchmark data
Variable Comparison	Multiple build plates	Design of experiments	Variable indicators
Process Monitoring	Single artefact	SPC Data	Process Capability
PFMEA	Single artefact	Failure mode identification	Variable indicators

Use Cases – Array of Artefacts

- Comparison by feature
- Comparison of process parameters
- Comparison across build volume

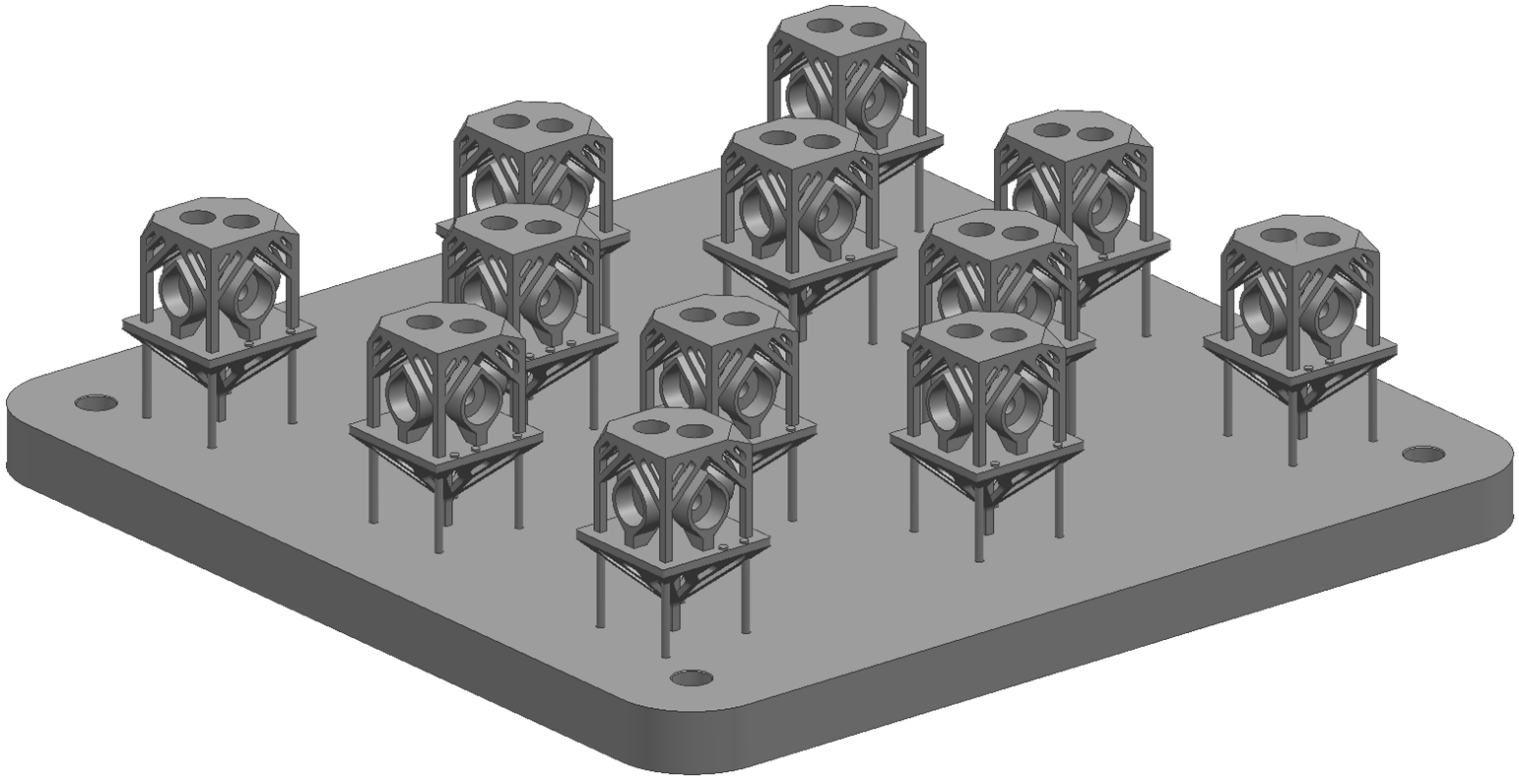

Use Cases – Single Artefacts

- Comparison by feature
- Comparison of process parameters
- SPC data for that location
- Identification and corrective action for build failure

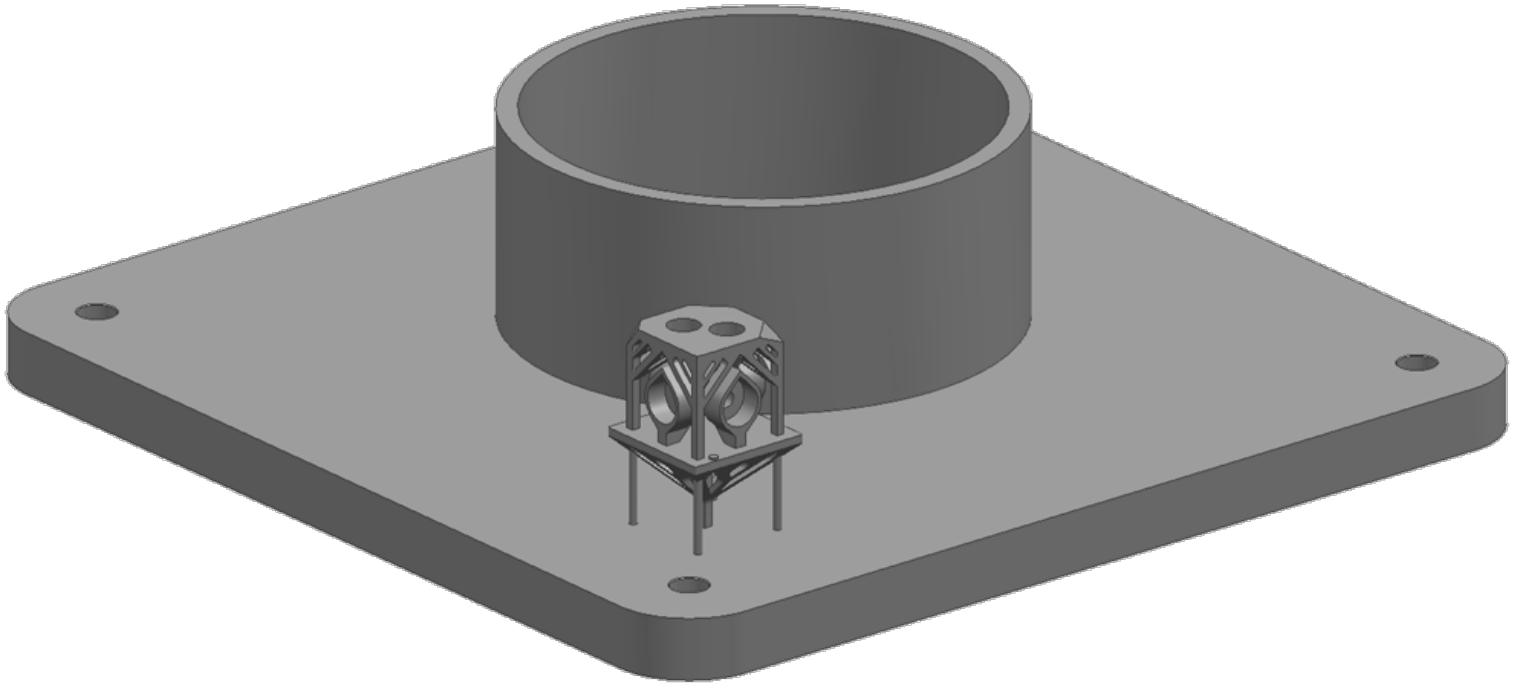

Proof of Concept

- Gauge R&R (Repeatability and Reproducibility) after every system change
- Initial investigation of XY scaling, Z scaling and spot compensation as compared to a nominal build
- Further studies will investigate other AM build parameters alongside on-going machine benchmarks using various materials and platforms

Metrology Performance – Type 1 Gauge R&R

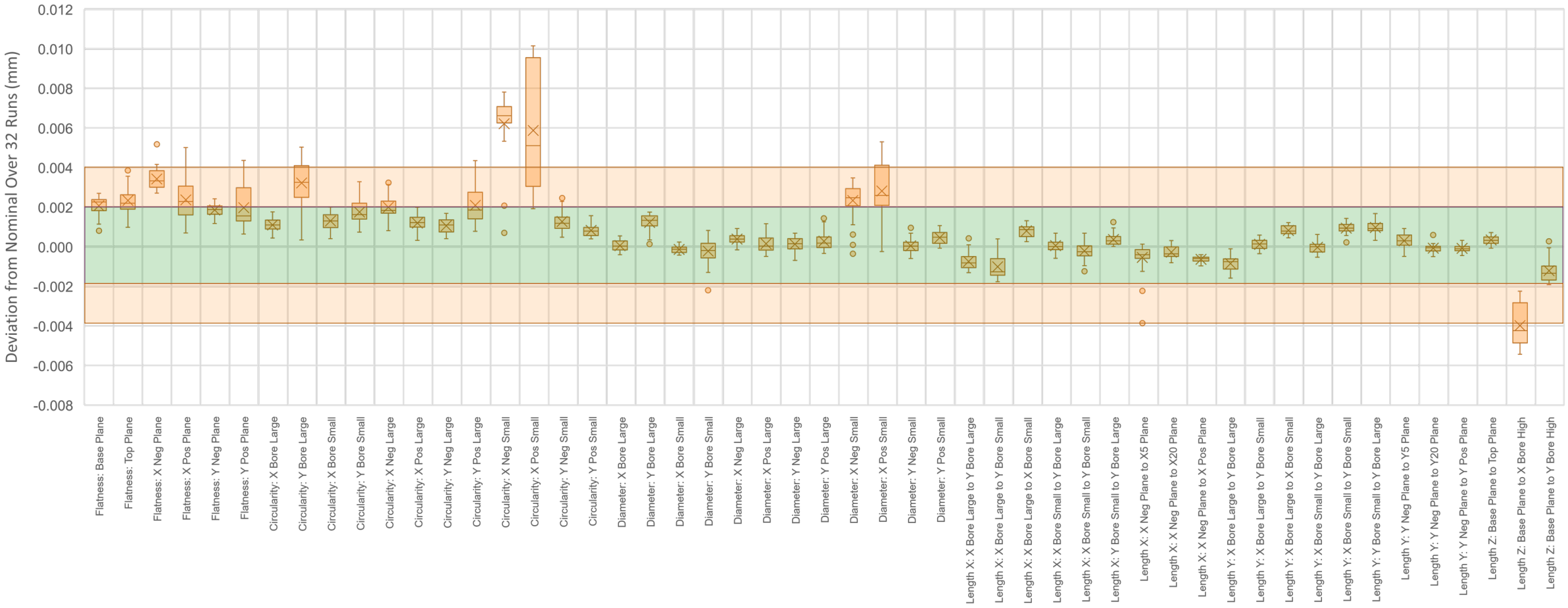

Metrology Performance – Type 1.5 Gauge R&R

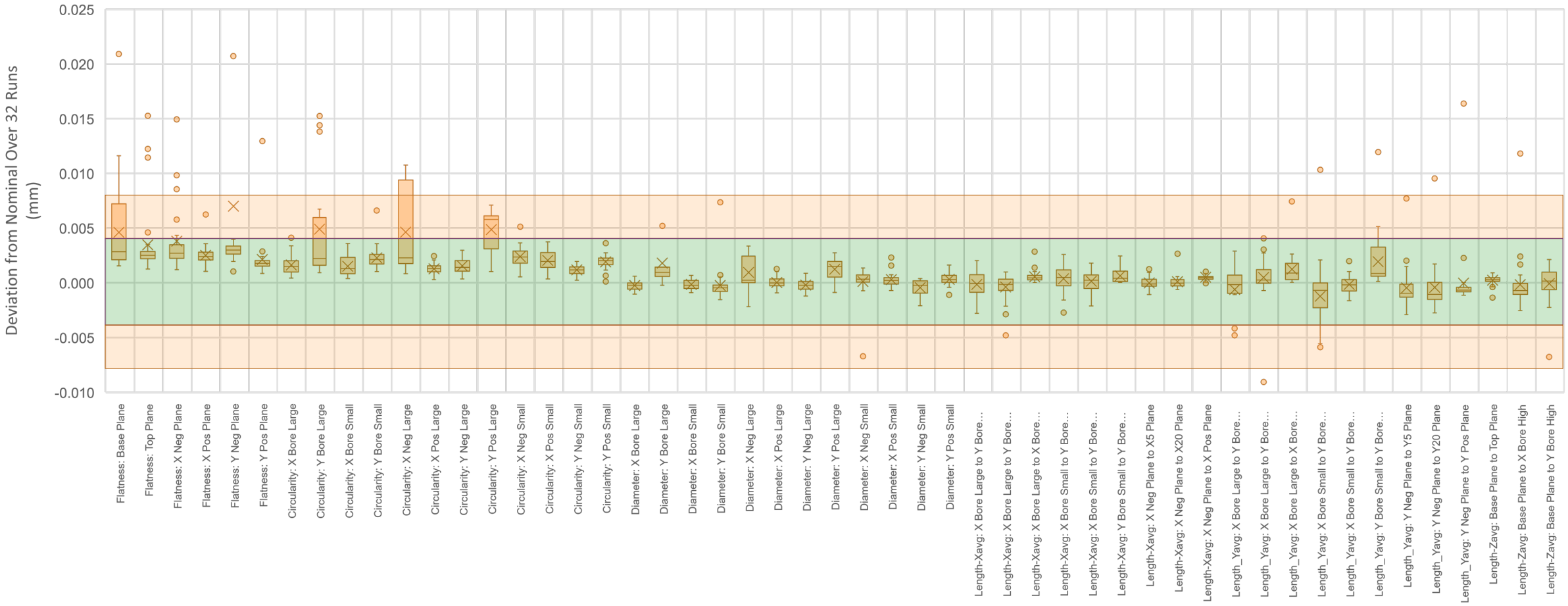

Metrology Performance – Z Scaling

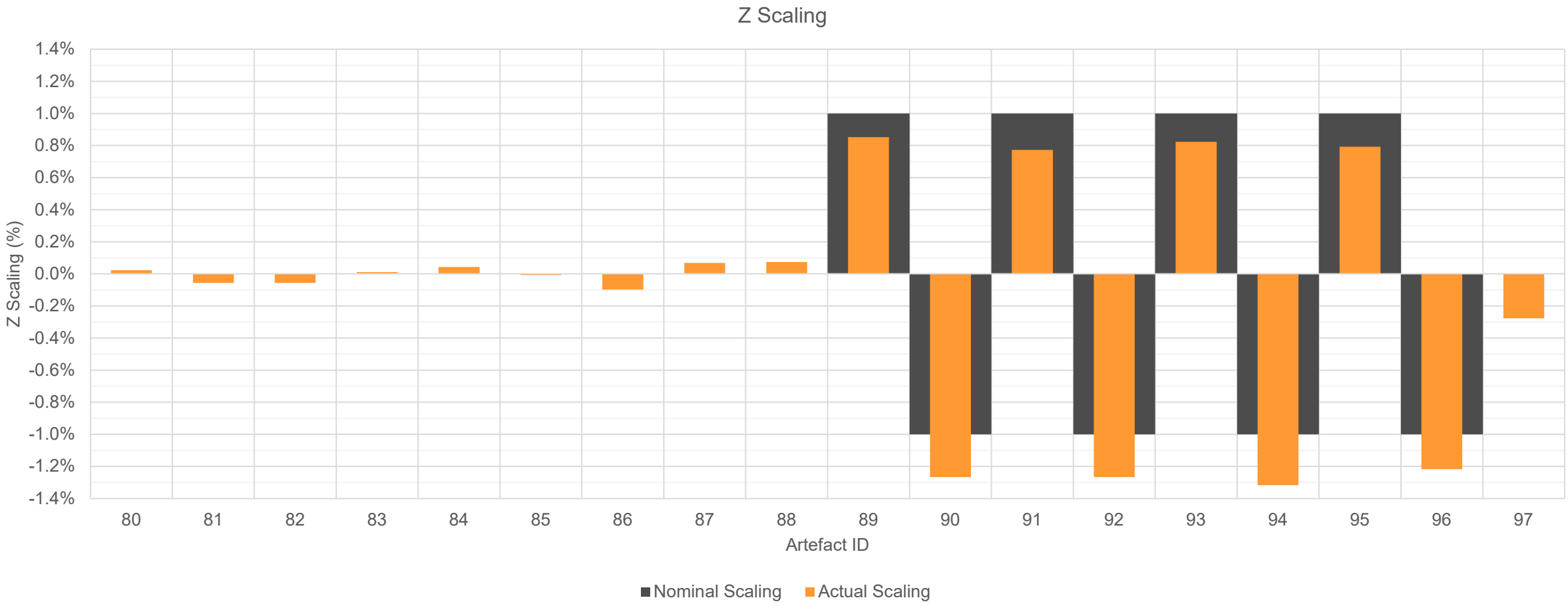

Metrology Performance – XY Scaling

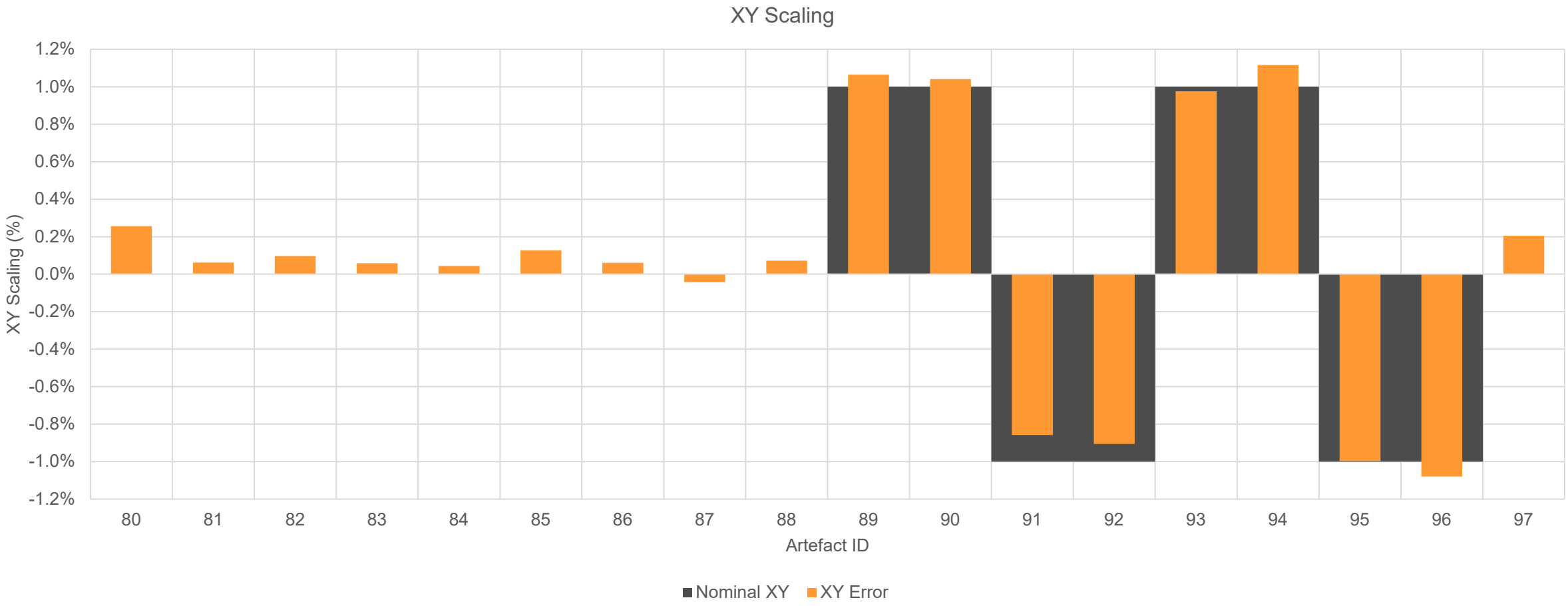

Metrology Performance – Spot Compensation

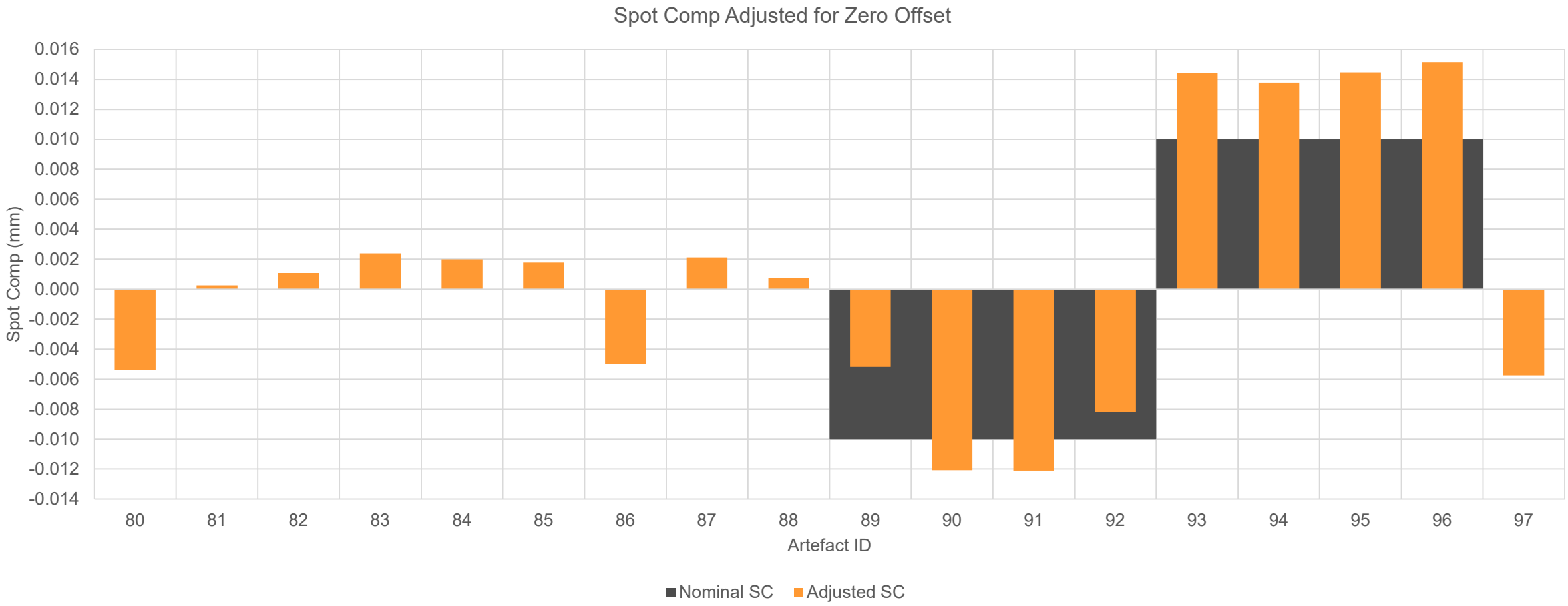

Summary

A system has been developed which uses additively manufactured artefacts to indicate trends in machine performance and the effects of AM build parameters.

It does so using tactile inspection on an Equator and analysis of the results on an external computer.

The metrology performance of the system has been confirmed and used for initial investigations in to XY scaling, Z scaling and spot compensation.

Further work will continue AM build parameter investigations alongside machine benchmarks.